PROFESSIONAL MANUFACTURER OF HIGH VOLTAGE DC CONTACTORS

An Lai Qiang

产品选型手册

PRODUCT SELECTION GUIDE

Industrial Vehicle Systems
工业车辆系统

ESS Energy Storage System
ESS储能系统

Charging Pile System
充电桩系统

Electric Vehicle System
电动汽车系统

CERTIFIED IATF 16949:2016 COMPANY

安来强科技

高压直流接触器专业制造商

磐石之安 / 继往开来 / 奋发图强

Safety as a rock
Come from brilliant history
To be powerful in the future

Enterprise Profile

苏州安来强电子科技有限公司创建于2013年，公司坐落于美丽富饶的历史文化名城-苏州， 公司致力于高压直流接触器、断路器、继电器的研发、生产与服务。产品广泛应用于电动汽车、 充电桩、仓储物流、储能、5G、军工等直流电源应用领域。

公司拥有一支高素质的员工队伍，凭借着不断增强的创新能力与日趋完善的服务能力赢得了广大客户的信任与认可。 公司不断引进国内外先进设计理念，携手东南大学等重点院校紧密合作，并与贵州振华群英电器有限公司建立战略合作伙伴关系。公司凭借极强的自主创新能力，研发的相关技术与产品先后获得多项核心专利， 产品不断升级迭代至全球领先水平。

公司注重全流程的质量管理，拥有一批先进的智能化、数字化研发和制造管理设备系统， 通过科学化的管理确保产品质量。

苏州安来强致力于为用户提供高端电器产品，为社会、客户创造更高价值，打造一流领先的民族电器品牌，力争为中国新能源事业做出更大的贡献。

Suzhou Anlaiqiang Electronic Technology Co., Ltd., founded in 2013, is located in Suzhou. We are committed to the R&D, production and service of high-voltage DC contactors, circuit breakers and relays. Our products are widely used in DC power applications such as electric vehicle, charging pile, warehousing and logistics, energy storage, 5G communication, military industry and so on.

We have won customers' trust and recognition with a high qualified team who has innovation ability and perfect service system. We try our best to keep the product at the world-level by introducing advanced design philosophy from home and abroad, innovating dependently, co-operating with college. We make advantage of scientific management, with advanced intelligent digital R&D and manufacturing management to ensure product quality.

Suzhou Anlaiqiang is devoted to offering customers high-quality products and after sale service and we also obtained a series of professional patents.

Suzhou Anlaiqiang is struggling to building a world level electrical brand and making contribution to new energy storage industry.

[2013]
成立时间
Established time

[专精特新]
专精特新企业
Technological innovation

[高新技术]
高新技术企业
high-tech enterprises

[IATF16949]
质量管理体系认证
Quality management system certification

安来强科技

Industrial Vehicle Systems

工业车辆系统

①仓储物流 / ②低速车 / ③高空检查作业车

Warehouse Logistics / Low Speed Car / High-altitude Inspection Work Vehicle

ESS Energy Storage System

ESS储能系统

①分布式梯次储能系统 / ②家庭储能系统 / ③变电站UPS系统 / ④集装箱式储能

Distributed Ladder Energy Storage System / Home Energy Storage System

HSubstation UPS system / Containerized Energy Storage

Charging Pile System

充电桩系统

①一体双枪式充电桩 / ②分体式四充/八充充电桩 / ③集成式充电桩 / ④一体一枪式充电桩

Integrated Dual-gun Charging Pile / Split four-charger/eight-charger charging post

Integrated Charging Pile / All-in-one One-gun Charging Pile

Electric Vehicle System

电动汽车系统

①乘用车 / ②物流车 / ③商用货车

Passenger Car / Logistics Vehicle / Commercial Truck

目录
Contents

产品结构选型指南

Product Structure Selection Guide

"/"表示不可选；"○"表示可选；"√"表示标准型（推荐）

负载电压 Load voltage	负载电流 Load current	壳架代码 Shell code	线圈控制方式 Coil control method	线圈引线极性 Coil lead polarity		主触点极性 Main contact polarity	辅助触点 Auxiliary contact	主触点安装方式 Power terminations		产品安装方式 Product mounting	
				无极性 No polarity	有极性 Polarity	无极性 No polarity		内螺纹 Female thread	外螺纹 Male thread	底面安装 Bottom mount	侧面安装 Side mount
12-1500VDC	10A	1	单线圈	√	/	√	/	√	/	√	/
12-1500VDC	30A	1	单线圈	√	/	√	/	√	/	√	/
12-1500VDC	50A	1	单线圈	√	/	√	/	√	/	√	/
		2	单线圈	√	/	√	○	√	/	√	○
12-1500VDC	100A	2	单线圈	√	/	√	○	√	/	√	○
12-1000VDC		S	单线圈	√	/	√	○	√	/	√	/
12-1000VDC	135A	2	单线圈	√	/	√	○	√	/	√	○
		S	单线圈	√	/	√	○	√	/	√	/
12-1000VDC	150A	2	单线圈	√	/	√	○	√	/	√	○
		3	单线圈	√	/	√	○	√	/	√	/
12-1500VDC		5	双线圈	/		√	○	○	√	√	/
12-1000VDC	200A	3	单线圈	√	/	√	○	√	/	√	/
12-1500VDC		5	双线圈	/		√	○	○	√	√	/
12-1000VDC	250A	3	单线圈	√	/	√	○	√	/	√	/
12-1000VDC		6	单线圈			√	○	○	√	√	/
12-1500VDC		5	双线圈	/	√	√	○	○	√	√	/
12-450VDC	300A	6	单线圈	√	/	√	○	√	○	√	/
12-1500VDC		5E	双线圈	/	√	√	○	○	√	√	/
12-450VDC		5G	双线圈	/	√	√	○	○	√	√	/
12-1000VDC	350A	5E	双线圈	/	√	√	○	○	√	√	/
12-450VDC	400A	6	单线圈			√	○	√	○	√	/
12-1500VDC		8	双线圈	/	√	√	○	○	√	√	/
12-450VDC		5G	双线圈	/	√	√	○	○	√	√	/
12-1500VDC	500A	8	双线圈	/	√	√	○	○	√	√	/
	600A	8	双线圈	/	√	√	○	○	√	√	/
12-1500VDC	800A	9	PWM	/	√	√	○	/	√	√	/
	1000A	9	PWM	/	√	√	○	/	√	√	/

特性 Features

◎ 产品符合欧盟RoHS指令。
The product complies with the EU RoHS directive.

◎ 密封且安全，对安装位置不敏感。
Hermetically sealed and intrinsically safe. Not mounting position sensitive.

◎ 在恶劣环境下，产品触点不会被氧化或污染。
Operates in harsh environments without oxidation or contamination of contacts.

◎ 高压触点间填充有惰性气体。
High voltage isolation between open contacts, inert gas filled contact chamber.

◎ 产品设计与管控符合IATF-16949。
Product design and quality control in accordance to IATF-16949.

◎ 典型应用于车载电池、电机控制器、充电桩、光伏、储能。
Typical applications apply to Battery electric vehicles ,DC motor controller protection,DC charging pile, Photovoltaic controls,Energy Storage systems.

线圈参数 Coil Data

线圈电压 Coil Voltage	动作电压 Pickup Voltage	释放电压 Dropout Voltage	线圈电阻 Coil Resistance	平均保持电流 Avg. Holding Current	保持功耗 Holding Power
12VDC	9VDC Max	1.2VDC Min	45Ω	267mA	3.2W
24VDC	18VDC Max	2.4VDC Min	167Ω	144mA	3.5W
48VDC	36VDC Max	4.8VDC Min	630Ω	76.2mA	3.7W

备注：1、线圈参数值是环境温度为20℃下的理论值，因线圈电阻的影响以上参数约±10%的变动范围；2、线圈可靠的工作电压范围为85%~110%Us额定电压；3、如需其他额定电压，可特殊订货。
Remarks: 1. The coil parameter values are theoretical values at an ambient temperature of 20 ℃, with a variation range of approximately ± 10% due to the influence of coil resistance; 2. The reliable working voltage range of the coil is 85%~110% of the rated voltage; 3. If other rated voltages are required, special orders can be made.

触点参数 Main Contact

触点形式 Contact Arrangement	1 Form A (SPST-NO)
触点极性 Contact Polarized	无极性 Nonpolarized
接触电阻(初始) Contact Resistance (Initial)	1mΩ (Typical Value)
负载电压 Loda Voltage	12-1500VDC
额定电流 Current (continuous)	10A
机械寿命 Mechanical Life	2×10^5 cycles
电气寿命 Electrical Life	图1 Graph 1
过载电流 Overload Current	图2 Graph 2

备注：1、阻性负载类别(L/R<0.1ms)；2、接通和分断转换频率，ON : OFF=1秒 : 9秒；3、测试环境温度为23±5℃；4、电气寿命是产品带载分断的次数。
Remarks: 1. Resistive load category (L/R<0.1ms); 2. Switching frequency between on and off, ON: OFF=1 sec: 9 sec; 3. The testing environment temperature is 23 ± 5 ℃; 4. The electrical life is the number of times a product breaks under load.

性能参数 Performance Parameter

绝缘电阻 Insulation Resistance	1000MΩ@2500VDC (Initial) ≤50MΩ@1000VDC (End)
介质耐压 Dielectric Withstanding Voltage	AC3500V 1min ≤10mA
动作时间 Operate Time	30ms (Include bounce)
释放时间 Release Time	12ms (Include bounce)
弹跳时间 Bounce Time	5ms
冲击 Shock	20g peak,1/2 sine(Operating)
正弦振动 Sine Vibration	20g peak,80~2000Hz
湿度 Humidity	5%~85%RH
温度 Operating Temperature	-40℃~+85℃
重量 Weight	120g Approx

备注：1、线圈施加额定工作电压，无续流二极管；2、测试环境温度为20℃。
Remarks: 1. Apply rated working voltage to the coil without a freewheeling diode; 2. The testing environment temperature is 20 ℃.

电气寿命参考曲线-图1
Electrical Life Reference Curve-Graph1

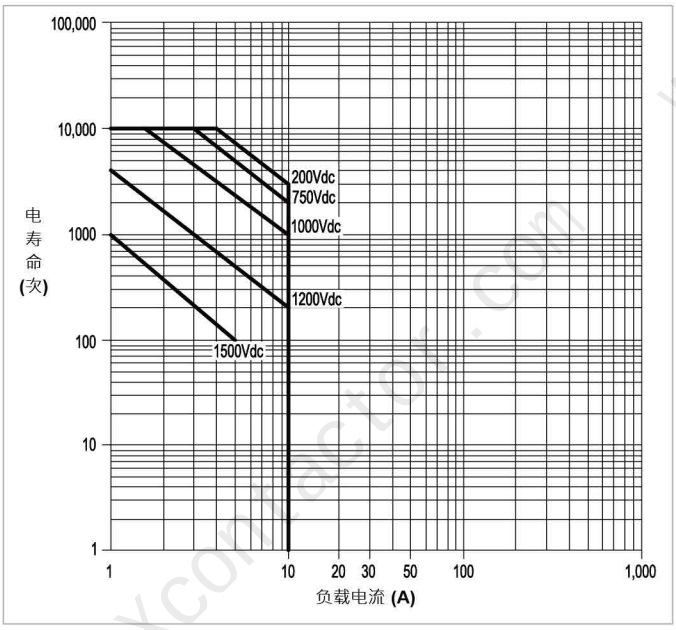

过载电流参考曲线-图2
Overload Current vs Time Reference Curve-Graph2

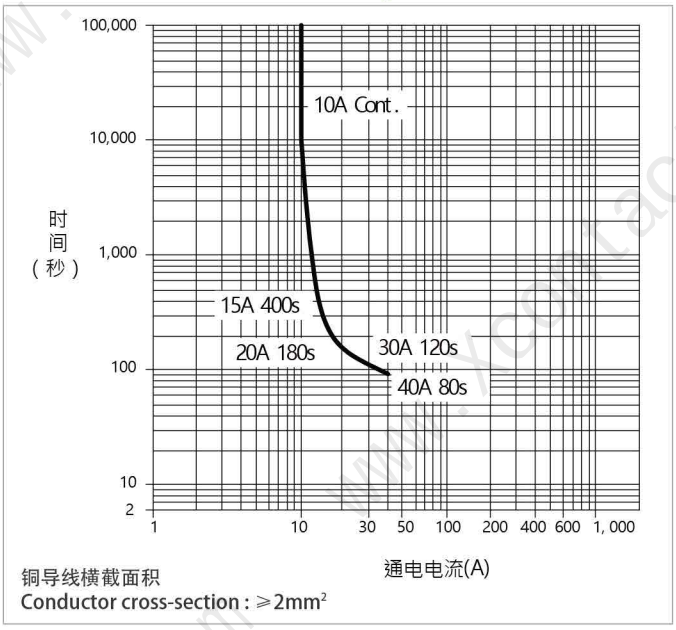

备注：1、以上数据曲线作为设计参考选型，不作为选型熔断器的依据；2、环境温度为23±5℃下。
Remarks: 1. The above data curve is used as a design reference for selection and not as a basis for selecting fuses; 2. At an ambient temperature of 23 ± 5 ℃.

尺寸图&接线原理图 Dimension & Wiring

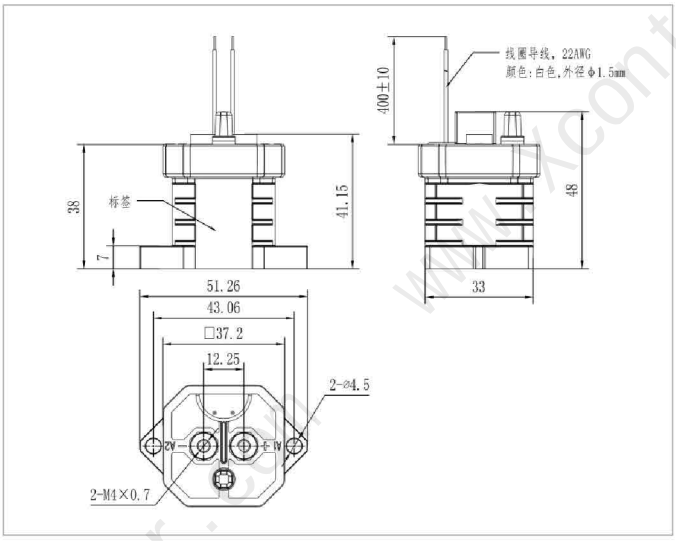

安装紧固件 Fastener	扭力范围 Torque Range	
	主触头接线 Main contacts wiring	底部固定 Product mount
M4×8 (配套提供 Provided)	1.8~2.5N・m	1.8~2.5N・m

（负载无极性）

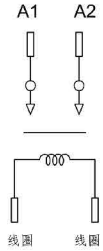

（线圈无极性）

备注：
1、尺寸单位：mm，视角：⊕-▷；
2、未注尺寸公差：
标称值＜10mm为±0.3，
标称值10～50mm为±0.6，
标称值＞50mm为±1.0；

Remarks:
1.Dimension unit: mm, viewing angle: ⊕-▷；
2. Undeclared dimensional tolerance:
± 0.3 for nominal values<10mm,
The nominal value of 10-50mm is ± 0.6,±1.0 for nominal values greater than 50mm;

订货说明 Ordering Information

EVQ10 E 12 D A 1***

额定电流 Rated Current：
“10”＝10A

触点形式 Main contacts feature：
“E”＝主触头为一组常开，触头不分极性；
1 form A(ON), non-polarized；

线圈电压 Coil Voltage：
“12”＝12VDC
“24”＝24VDC
“48”＝48VDC

线圈引出方式 Coil lead out：
“D”＝导线式，不带连接器；Wire Without Connectors
“E”＝导线式，带连接器；Wire With Connectors
（制造商推荐Manufacturer's recommendation）

安装方式 Mounting：
“A”＝立式安装
Bottom mount

产品代码
Product code

特性 Features

◎ 产品符合欧盟RoHS指令。
The product complies with the EU RoHS directive.

◎ 密封且安全，对安装位置不敏感。
Hermetically sealed and intrinsically safe. Not mounting position sensitive.

◎ 在恶劣环境下，产品触点不会被氧化或污染。
Operates in harsh environments without oxidation or contamination of contacts.

◎ 高压触点间填充有惰性气体。
High voltage isolation between open contacts, inert gas filled contact chamber.

◎ 产品设计与管控符合IATF-16949。
Product design and quality control in accordance to IATF-16949.

◎ 典型应用于车载电池、电机控制器、充电桩、光伏、储能。
Typical applications apply to Battery electric vehicles ,DC motor controller protection,DC charging pile, Photovoltaic controls,Energy Storage systems.

线圈参数 Coil Data

线圈电压 Coil Voltage	动作电压 Pickup Voltage	释放电压 Dropout Voltage	线圈电阻 Coil Resistance	平均保持电流 Avg. Holding Current	保持功耗 Holding Power
12VDC	9VDC Max	1.2VDC Min	45Ω	267mA	3.2W
24VDC	18VDC Max	2.4VDC Min	167Ω	144mA	3.5W
48VDC	36VDC Max	4.8VDC Min	630Ω	76.2mA	3.7W

备注：1、线圈参数值是环境温度为20℃下的理论值，因线圈电阻的影响以上参数约±10%的变动范围；2、线圈可靠的工作电压范围为85%~110%Us额定电压；3、如需其他额定电压，可特殊订货。
Remarks: 1. The coil parameter values are theoretical values at an ambient temperature of 20 ℃, with a variation range of approximately ± 10% due to the influence of coil resistance; 2. The reliable working voltage range of the coil is 85%~110% of the rated voltage; 3. If other rated voltages are required, special orders can be made.

触点参数 Main Contact

触点形式 Contact Arrangement	1 Form A (SPST-NO)
触点极性 Contact Polarized	无极性 Nonpolarized
接触电阻(初始) Contact Resistance (Initial)	1mΩ (Typical Value)
负载电压 Loda Voltage	12-1500VDC
额定电流 Current (continuous)	30A
机械寿命 Mechanical Life	2×10^5 cycles
电气寿命 Electrical Life	图1 Graph 1
过载电流 Overload Current	图2 Graph 2

备注：1、阻性负载类别(L/R<0.1ms)；2、接通和分断转换频率，ON：OFF=1秒：9秒；3、测试环境温度为23±5℃；4、电气寿命是产品带载分断的次数。
Remarks: 1. Resistive load category (L/R<0.1ms); 2. Switching frequency between on and off, ON: OFF=1 sec: 9 sec; 3. The testing environment temperature is 23 ± 5 ℃; 4. The electrical life is the number of times a product breaks under load.

性能参数 Performance Parameter

绝缘电阻 Insulation Resistance	1000MΩ@2500VDC (Initial) ≤50MΩ@1000VDC (End)
介质耐压 Dielectric Withstanding Voltage	AC3500V 1min ≤10mA
动作时间 Operate Time	30ms (Include bounce)
释放时间 Release Time	12ms (Include bounce)
弹跳时间 Bounce Time	5ms
冲击 Shock	20g peak,1/2 sine(Operating)
正弦振动 Sine Vibration	20g peak,80~2000Hz
湿度 Humidity	5%~85%RH
温度 Operating Temperature	-40℃~+85℃
重量 Weight	120g Approx

备注：1、线圈施加额定工作电压，无续流二极管；2、测试环境温度为20℃。
Remarks: 1. Apply rated working voltage to the coil without a freewheeling diode; 2. The testing environment temperature is 20 ℃.

电气寿命参考曲线-图1
Electrical Life Reference Curve-Graph1

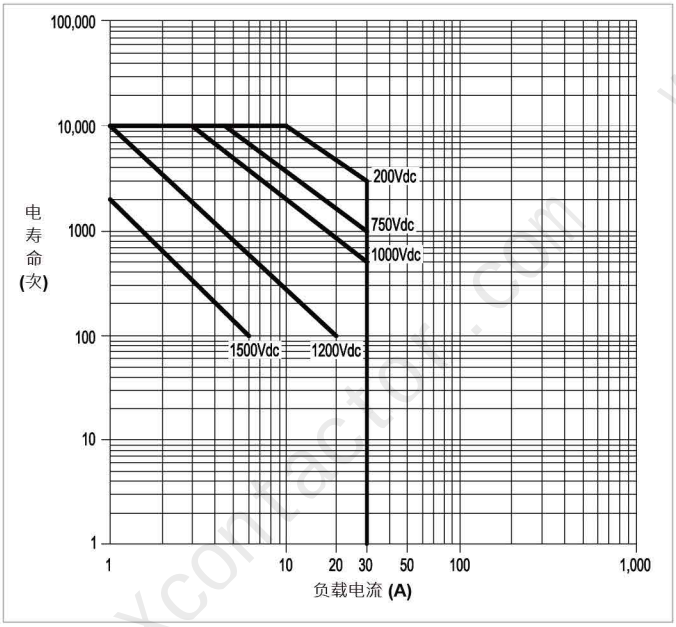

过载电流参考曲线-图2
Overload Current vs Time Reference Curve-Graph2

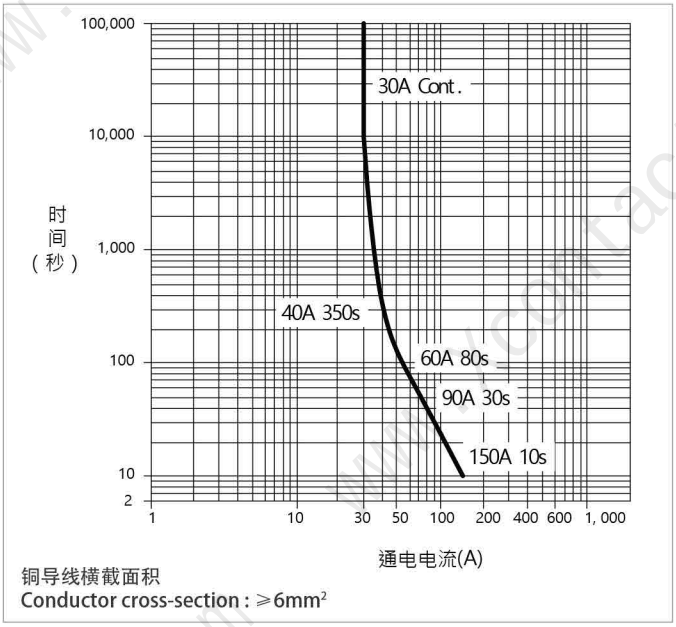

备注：1、以上数据曲线作为设计参考选型，不作为选型熔断器的依据；2、环境温度为23±5℃下。
Remarks: 1. The above data curve is used as a design reference for selection and not as a basis for selecting fuses; 2. At an ambient temperature of 23 ± 5 ℃.

尺寸图&接线原理图 Dimension & Wiring

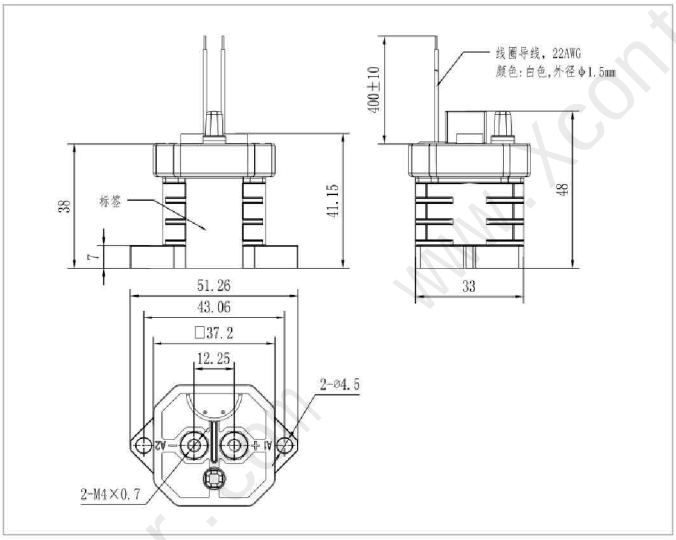

安装紧固件 Fastener	扭力范围 Torque Range	
	主触头接线 Main contacts wiring	底部固定 Product mount
M4×8 (配套提供 Provided)	1.8～2.5N・m	1.8～2.5N・m

（负载无极性）

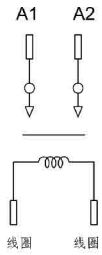

（线圈无极性）

备注：
1、尺寸单位：mm，视角：⊕-⊳；
2、未注尺寸公差：
标称值＜10mm为±0.3，
标称值10～50mm为±0.6，
标称值＞50mm为±1.0；

Remarks:
1.Dimension unit: mm, viewing angle: ⊕-⊳；
2. Undeclared dimensional tolerance:
± 0.3 for nominal values<10mm,
The nominal value of 10-50mm is ± 0.6,±1.0 for nominal values greater than 50mm;

订货说明 Ordering Information

EVQ30 E 12 D A 1***

额定电流 Rated Current：
“30”＝30A

触点形式 Main contacts feature：
“E”＝主触头为一组常开，触头不分极性；
1 form A(ON), non-polarized；

线圈电压 Coil Voltage：
“12”＝12VDC
“24”＝24VDC
“48”＝48VDC

线圈引出方式 Coil lead out：
“D”＝导线式，不带连接器；Wire Without Connectors
“E”＝导线式，带连接器；Wire With Connectors
（制造商推荐 Manufacturer's recommendation）

安装方式 Mounting：
“A”＝立式安装
Bottom mount

产品代码
Product code

特性 Features

◎ 产品符合欧盟RoHS指令。
The product complies with the EU RoHS directive.

◎ 密封且安全，对安装位置不敏感。
Hermetically sealed and intrinsically safe. Not mounting position sensitive.

◎ 在恶劣环境下，产品触点不会被氧化或污染。
Operates in harsh environments without oxidation or contamination of contacts.

◎ 高压触点间填充有惰性气体。
High voltage isolation between open contacts, inert gas filled contact chamber.

◎ 产品设计与管控符合IATF-16949。
Product design and quality control in accordance to IATF-16949.

◎ 典型应用于车载电池、电机控制器、充电桩、光伏、储能。
Typical applications apply to Battery electric vehicles ,DC motor controller protection,DC charging pile, Photovoltaic controls,Energy Storage systems.

线圈参数 Coil Data

线圈电压 Coil Voltage	动作电压 Pickup Voltage	释放电压 Dropout Voltage	线圈电阻 Coil Resistance	平均保持电流 Avg. Holding Current	保持功耗 Holding Power
12VDC	9VDC Max	1.2VDC Min	45Ω	267mA	3.2W
24VDC	18VDC Max	2.4VDC Min	167Ω	144mA	3.5W
48VDC	36VDC Max	4.8VDC Min	630Ω	76.2mA	3.7W

备注：1、线圈参数值是环境温度为20℃下的理论值，因线圈电阻的影响以上参数约±10%的变动范围；2、线圈可靠的工作电压范围为85%~110%Us额定电压；3、如需其他额定电压，可特殊订货。
Remarks: 1. The coil parameter values are theoretical values at an ambient temperature of 20 ℃, with a variation range of approximately ± 10% due to the influence of coil resistance; 2. The reliable working voltage range of the coil is 85%~110% of the rated voltage; 3. If other rated voltages are required, special orders can be made.

触点参数 Main Contact

触点形式 Contact Arrangement	1 Form A (SPST-NO)
触点极性 Contact Polarized	无极性 Nonpolarized
接触电阻(初始) Contact Resistance (Initial)	1mΩ (Typical Value)
负载电压 Loda Voltage	12-1500VDC
额定电流 Current (continuous)	50A
机械寿命 Mechanical Life	2×10^5 cycles
电气寿命 Electrical Life	图1 Graph 1
过载电流 Overload Current	图2 Graph 2

备注：1、阻性负载类别(L/R<0.1ms)；2、接通和分断转换频率，ON : OFF=1秒 : 9秒；3、测试环境温度为23±5℃；4、电气寿命是产品带载分断的次数。
Remarks: 1. Resistive load category (L/R<0.1ms); 2. Switching frequency between on and off, ON: OFF=1 sec: 9 sec; 3. The testing environment temperature is 23 ± 5 ℃; 4. The electrical life is the number of times a product breaks under load.

性能参数 Performance Parameter

绝缘电阻 Insulation Resistance	1000MΩ@1000VDC (Initial) ≤50MΩ@1000VDC (End)
介质耐压 Dielectric Withstanding Voltage	AC3500V 1min ≤10mA
动作时间 Operate Time	30ms (Include bounce)
释放时间 Release Time	12ms (Include bounce)
弹跳时间 Bounce Time	5ms
冲击 Shock	20g peak,1/2 sine(Operating)
正弦振动 Sine Vibration	20g peak,80~2000Hz
湿度 Humidity	5%~85%RH
温度 Operating Temperature	-40℃~+85℃
重量 Weight	120g Approx

备注：1、线圈施加额定工作电压，无续流二极管；2、测试环境温度为20℃。
Remarks: 1. Apply rated working voltage to the coil without a freewheeling diode; 2. The testing environment temperature is 20 ℃.

电气寿命参考曲线-图1
Electrical Life Reference Curve-Graph1

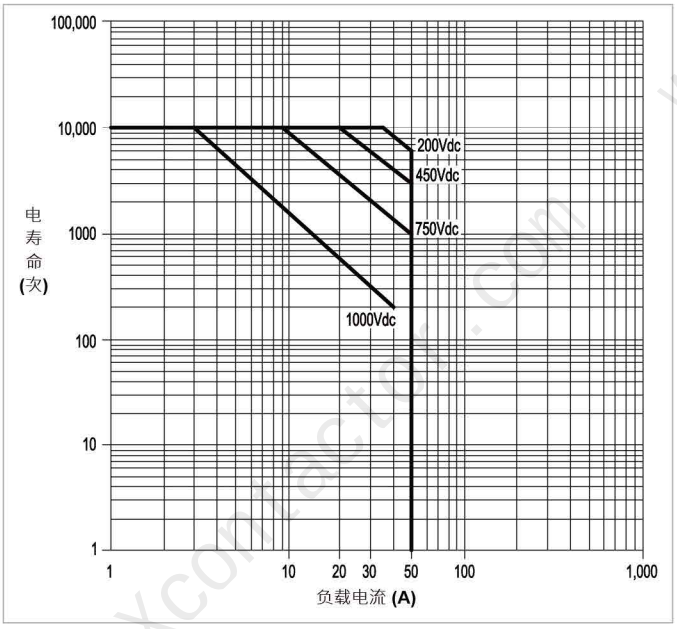

过载电流参考曲线-图2
Overload Current vs Time Reference Curve-Graph2

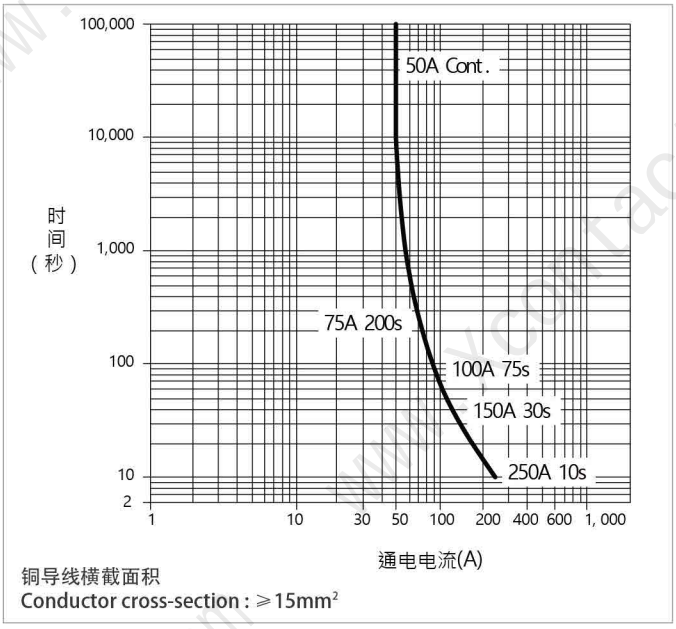

备注：1、以上数据曲线作为设计参考选型，不作为选型熔断器的依据；2、环境温度为23±5℃下。
Remarks: 1. The above data curve is used as a design reference for selection and not as a basis for selecting fuses; 2. At an ambient temperature of 23 ± 5 ℃.

尺寸图&接线原理图 Dimension & Wiring

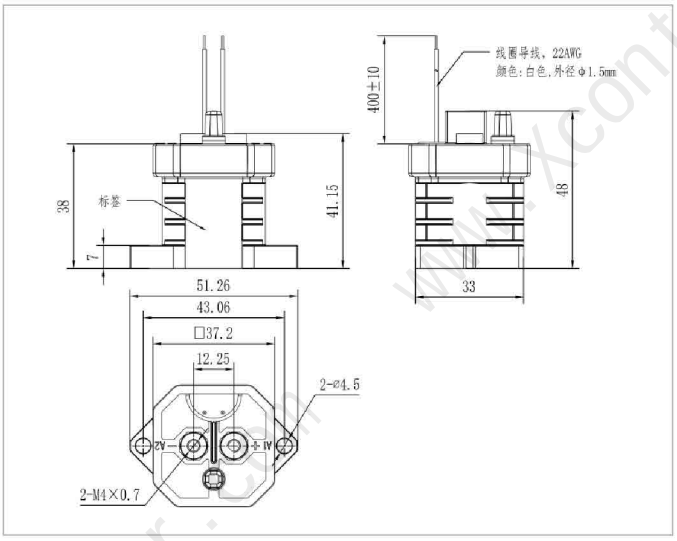

安装紧固件 Fastener	扭力范围 Torque Range	
	主触头接线 Main contacts wiring	底部固定 Product mount
M4×8 (配套提供 Provided)	1.8～2.5N・m	1.8～2.5N・m

（负载无极性）

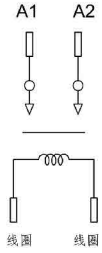

（线圈无极性）

备注：
1、尺寸单位：mm，视角：⊕-⊳；
2、未注尺寸公差：
标称值＜10mm为±0.3，
标称值10～50mm为±0.6，
标称值＞50mm为±1.0；

Remarks:
1.Dimension unit: mm, viewing angle: ⊕-⊳；
2. Undeclared dimensional tolerance:
± 0.3 for nominal values<10mm,
The nominal value of 10-50mm is ± 0.6,±1.0 for nominal values greater than 50mm;

订货说明 Ordering Information

EVQ50 E 12 D A 1***

额定电流 Rated Current：
“50”＝50A

触点形式 Main contacts feature：
“E”＝主触头为一组常开，触头不分极性；
1 form A(ON), non-polarized；

线圈电压 Coil Voltage：
“12”＝12VDC
“24”＝24VDC
“48”＝48VDC

线圈引出方式 Coil lead out：
“D”＝导线式，不带连接器；Wire Without Connectors
“E”＝导线式，带连接器；Wire With Connectors
（制造商推荐 Manufacturer's recommendation）

安装方式 Mounting：
“A”＝立式安装
Bottom mount

产品代码
Product code

特性 Features

◎ 产品符合欧盟RoHS指令。
The product complies with the EU RoHS directive.

◎ 密封且安全，对安装位置不敏感。
Hermetically sealed and intrinsically safe. Not mounting position sensitive.

◎ 在恶劣环境下，产品触点不会被氧化或污染。
Operates in harsh environments without oxidation or contamination of contacts.

◎ 高压触点间填充有惰性气体。
High voltage isolation between open contacts, inert gas filled contact chamber.

◎ 产品设计与管控符合IATF-16949。
Product design and quality control in accordance to IATF-16949.

◎ 典型应用于车载电池、电机控制器、充电桩、光伏、储能。
Typical applications apply to Battery electric vehicles ,DC motor controller protection,DC charging pile, Photovoltaic controls,Energy Storage systems.

线圈参数 Coil Data

线圈电压 Coil Voltage	动作电压 Pickup Voltage	释放电压 Dropout Voltage	线圈电阻 Coil Resistance	平均保持电流 Avg. Holding Current	保持功耗 Holding Power
12VDC	9VDC Max	1.2VDC Min	26Ω	461.5mA	5.5W
24VDC	18VDC Max	2.4VDC Min	96.4Ω	249mA	6W
48VDC	36VDC Max	4.8VDC Min	392Ω	122.5mA	5.9W

备注：1、线圈参数值是环境温度为20℃下的理论值，因线圈电阻的影响以上参数约±10%的变动范围；2、线圈可靠的工作电压范围为85%~110%Us额定电压；3、如需其他额定电压，可特殊订货。
Remarks: 1. The coil parameter values are theoretical values at an ambient temperature of 20 ℃, with a variation range of approximately ± 10% due to the influence of coil resistance; 2. The reliable working voltage range of the coil is 85%~110% of the rated voltage; 3. If other rated voltages are required, special orders can be made.

触点参数 Main Contact

触点形式 Contact Arrangement	1 Form A (SPST-NO)
触点极性 Contact Polarized	无极性 Nonpolarized
接触电阻(初始) Contact Resistance (Initial)	1mΩ (Typical Value)
负载电压 Loda Voltage	12-1500VDC
额定电流 Current (continuous)	50A
机械寿命 Mechanical Life	2×10^5 cycles
电气寿命 Electrical Life	图1 Graph 1
过载电流 Overload Current	图2 Graph 2

备注：1、阻性负载类别(L/R<0.1ms)；2、接通和分断转换频率，ON : OFF=1秒 : 9秒；3、测试环境温度为23±5℃；4、电气寿命是产品带载分断的次数。
Remarks: 1. Resistive load category (L/R<0.1ms); 2. Switching frequency between on and off, ON: OFF=1 sec: 9 sec; 3. The testing environment temperature is 23 ± 5 ℃; 4. The electrical life is the number of times a product breaks under load.

性能参数 Performance Parameter

绝缘电阻 Insulation Resistance	1000MΩ@2500VDC (Initial) ≤50MΩ@1000VDC (End)
介质耐压 Dielectric Withstanding Voltage	AC3500V 1min ≤10mA
动作时间 Operate Time	30ms (Include bounce)
释放时间 Release Time	12ms (Include bounce)
弹跳时间 Bounce Time	5ms
冲击 Shock	20g peak,1/2 sine(Operating)
正弦振动 Sine Vibration	20g peak,80~2000Hz
湿度 Humidity	5%~85%RH
温度 Operating Temperature	-40℃~+85℃
重量 Weight	190g Approx

备注：1、线圈施加额定工作电压，无续流二极管；2、测试环境温度为20℃。
Remarks: 1. Apply rated working voltage to the coil without a freewheeling diode; 2. The testing environment temperature is 20 ℃.

电气寿命参考曲线-图1
Electrical Life Reference Curve-Graph1

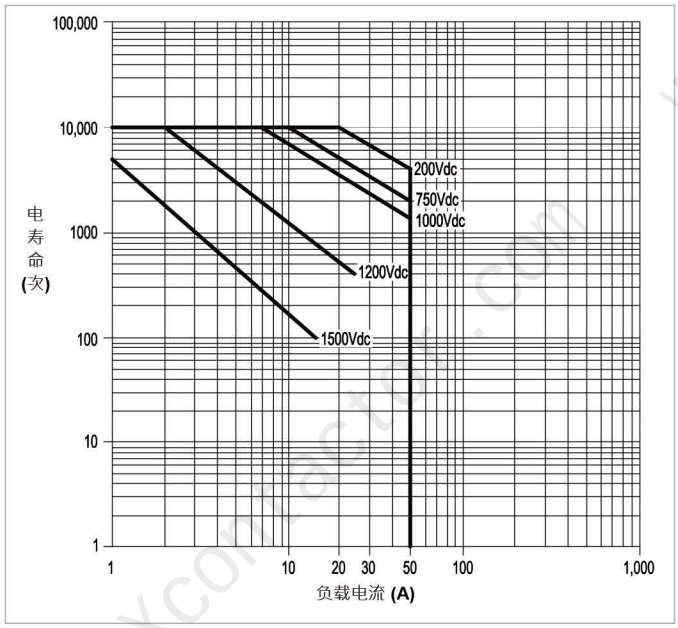

过载电流参考曲线-图2
Overload Current vs Time Reference Curve-Graph2

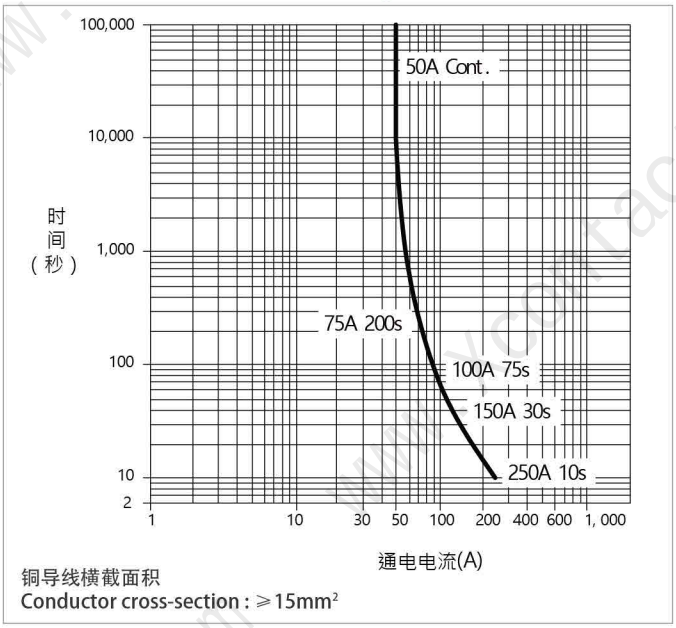

备注：1、以上数据曲线作为设计参考选型，不作为选型熔断器的依据；2、环境温度为23±5℃下。
Remarks: 1.The above data curve is used as a design reference for selection and not as a basis for selecting fuses; 2. At an ambient temperature of 23 ± 5 ℃.

尺寸图&接线原理图 Dimension & Wiring

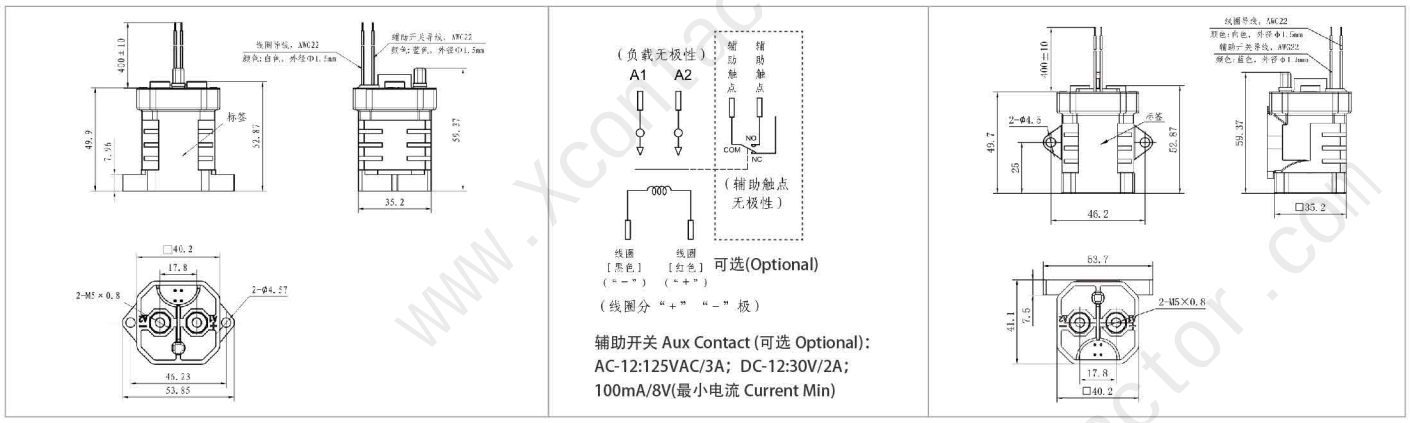

安装紧固件 Fastener	扭力范围 Torque Range	
	主触头接线 Main contacts wiring	底部固定 Product mount
M5×10 (配套提供 Provided)	3.5～4.4N・m	1.8～2.5N・m

备注：
1、尺寸单位：mm，视角：⊕-▷；
2、未注尺寸公差：标称值<10mm为±0.3，标称值10～50mm为±0.6，标称值>50mm为±1.0；

Remarks:
1.Dimension unit: mm, viewing angle: ⊕-▷；
2. Undeclared dimensional tolerance:± 0.3 for nominal values<10mm,The nominal value of 10-50mm is ± 0.6,±1.0 for nominal values greater than 50mm;

订货说明 Ordering Information

EVQ50 E 12 D A 2***

额定电流 Rated Current:
"50"＝50A

触点形式 Main contacts feature:
"E"＝主触头为一组常开，触头不分极性；1 form A(ON), non-polarized;
"G"＝主触头为一组常开，触头不分极性，带一组常开辅助触点；
1 form A(ON) add AUX contacts(ON), non-polarized;

线圈电压 Coil Voltage:
"12"＝12VDC
"24"＝24VDC
"48"＝48VDC

线圈引出方式 Coil lead out:
"D"＝导线式，不带连接器；Wire Without Connectors
"E"＝导线式，带连接器;Wire With Connectors
（制造商推荐Manufacturer's recommendation）

安装方式Mounting:
"A"＝立式安装 Bottom mount
"S"＝卧式安装 Side mount

产品代码
Product code

EVQ100 Series-2

100A 直流接触器 DC Contactor

特性 Features

◎ 产品符合欧盟RoHS指令。
The product complies with the EU RoHS directive.

◎ 密封且安全，对安装位置不敏感。
Hermetically sealed and intrinsically safe. Not mounting position sensitive.

◎ 在恶劣环境下，产品触点不会被氧化或污染。
Operates in harsh environments without oxidation or contamination of contacts.

◎ 高压触点间填充有惰性气体。
High voltage isolation between open contacts, inert gas filled contact chamber.

◎ 产品设计与管控符合IATF-16949。
Product design and quality control in accordance to IATF-16949.

◎ 典型应用于车载电池、电机控制器、充电桩、光伏、储能。
Typical applications apply to Battery electric vehicles ,DC motor controller protection,DC charging pile, Photovoltaic controls,Energy Storage systems.

线圈参数 Coil Data

线圈电压 Coil Voltage	动作电压 Pickup Voltage	释放电压 Dropout Voltage	线圈电阻 Coil Resistance	平均保持电流 Avg. Holding Current	保持功耗 Holding Power
12VDC	9VDC Max	1.2VDC Min	26Ω	461.5mA	5.5W
24VDC	18VDC Max	2.4VDC Min	96.4Ω	249mA	6W
48VDC	36VDC Max	4.8VDC Min	392Ω	122.5mA	5.9W

备注：1、线圈参数值是环境温度为20℃下的理论值，因线圈电阻的影响以上参数约±10%的变动范围；2、线圈可靠的工作电压范围为85%~110%Us额定电压；3、如需其他额定电压，可特殊订货。
Remarks: 1. The coil parameter values are theoretical values at an ambient temperature of 20 ℃, with a variation range of approximately ± 10% due to the influence of coil resistance; 2. The reliable working voltage range of the coil is 85%~110% of the rated voltage; 3. If other rated voltages are required, special orders can be made.

触点参数 Main Contact

触点形式 Contact Arrangement	1 Form A (SPST-NO)
触点极性 Contact Polarized	无极性 Nonpolarized
接触电阻(初始) Contact Resistance (Initial)	1mΩ (Typical Value)
负载电压 Loda Voltage	12-1500VDC
额定电流 Current (continuous)	100A
机械寿命 Mechanical Life	2×10^5 cycles
电气寿命 Electrical Life	图1 Graph 1
过载电流 Overload Current	图2 Graph 2

备注：1、阻性负载类别(L/R<0.1ms)；2、接通和分断转换频率，ON：OFF=1秒：9秒；3、测试环境温度为23±5℃；4、电气寿命是产品带载分断的次数。
Remarks: 1. Resistive load category (L/R<0.1ms); 2. Switching frequency between on and off, ON: OFF=1 sec: 9 sec; 3. The testing environment temperature is 23 ± 5 ℃; 4. The electrical life is the number of times a product breaks under load.

性能参数 Performance Parameter

绝缘电阻 Insulation Resistance	1000MΩ@2500VDC (Initial) ≤50MΩ@1000VDC (End)
介质耐压 Dielectric Withstanding Voltage	AC3500V 1min ≤10mA
动作时间 Operate Time	30ms (Include bounce)
释放时间 Release Time	12ms (Include bounce)
弹跳时间 Bounce Time	5ms
冲击 Shock	20g peak,1/2 sine(Operating)
正弦振动 Sine Vibration	20g peak,80~2000Hz
湿度 Humidity	5%~85%RH
温度 Operating Temperature	-40℃~+85℃
重量 Weight	190g Approx

备注：1、线圈施加额定工作电压，无续流二极管；2、测试环境温度为20℃。
Remarks: 1. Apply rated working voltage to the coil without a freewheeling diode; 2. The testing environment temperature is 20 ℃.

电气寿命参考曲线-图1
Electrical Life Reference Curve-Graph1

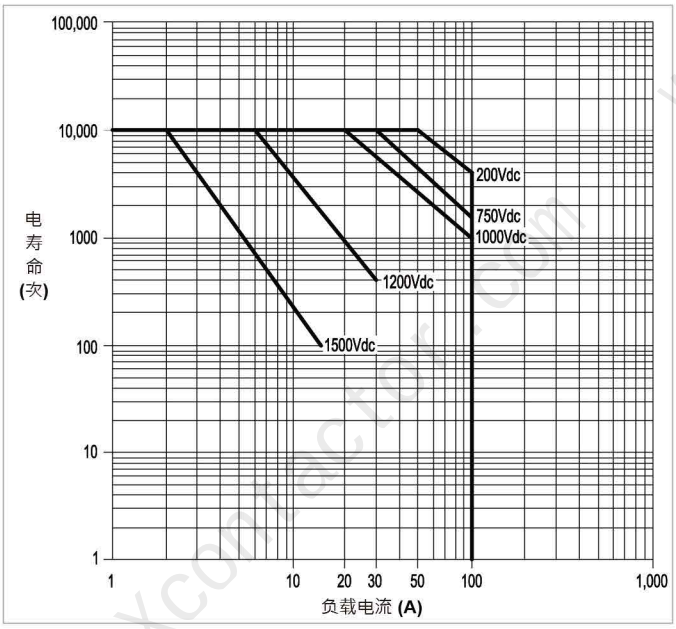

过载电流参考曲线-图2
Overload Current vs Time Reference Curve-Graph2

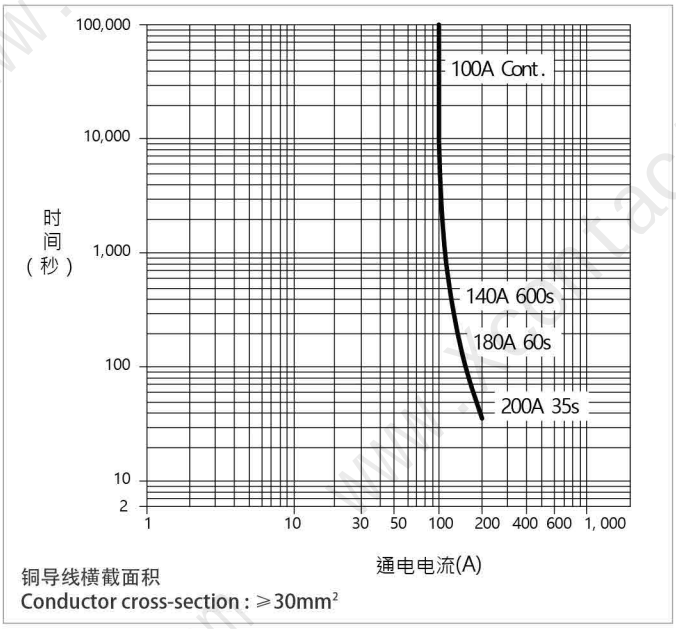

备注：1、以上数据曲线作为设计参考选型，不作为选型熔断器的依据；2、环境温度为23±5℃下。
Remarks: 1. The above data curve is used as a design reference for selection and not as a basis for selecting fuses; 2. At an ambient temperature of 23 ± 5 ℃.

尺寸图&接线原理图 Dimension & Wiring

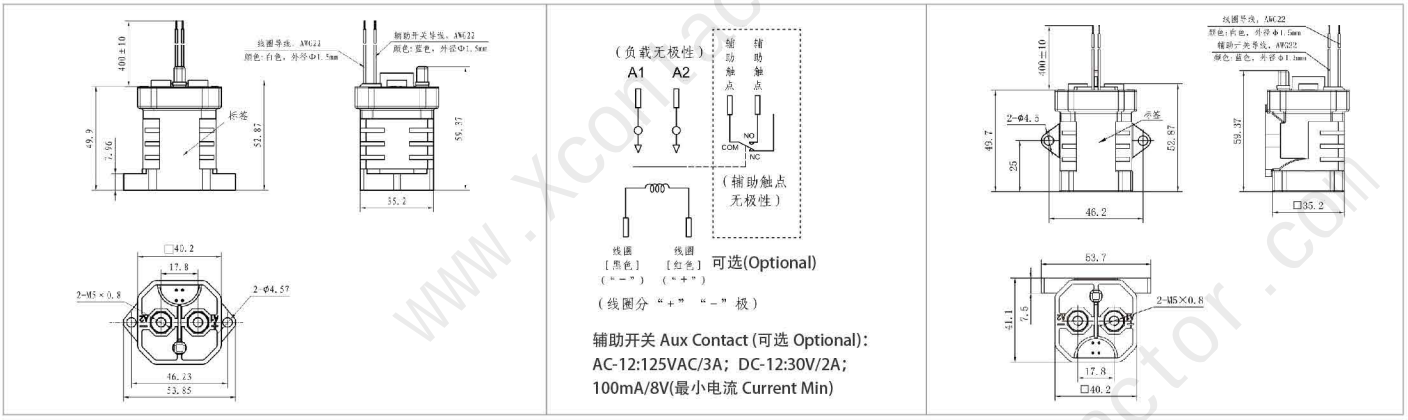

安装紧固件 Fastener	扭力范围 Torque Range	
	主触头接线 Main contacts wiring	底部固定 Product mount
M5×10 (配套提供 Provided)	3.5～4.4N・m	1.8～2.5N・m

备注：
1、尺寸单位：mm，视角：
2、未注尺寸公差：标称值<10mm为±0.3，标称值10～50mm为±0.6，标称值>50mm为±1.0；

Remarks:
1.Dimension unit: mm, viewing angle:
2. Undeclared dimensional tolerance:± 0.3 for nominal values<10mm,The nominal value of 10-50mm is ± 0.6,±1.0 for nominal values greater than 50mm;

订货说明 Ordering Information

EVQ100 E 12 D A 2***

额定电流 Rated Current:
"100"＝100A

线圈电压 Coil Voltage:
"12"＝12VDC
"24"＝24VDC
"48"＝48VDC

安装方式Mounting:
"A"＝立式安装 Bottom mount
"S"＝卧式安装 Side mount

产品代码
Product code

触点形式 Main contacts feature:
"E"＝主触头为一组常开，触头不分极性；1 form A(ON), non-polarized;
"G"＝主触头为一组常开，触头不分极性，带一组常开辅助触点；
1 form A(ON) add AUX contacts(ON), non-polarized;

线圈引出方式 Coil lead out:
"D"＝导线式，不带连接器；Wire Without Connectors
"E"＝导线式，带连接器;Wire With Connectors
（制造商推荐Manufacturer's recommendation）

特性 Features

◎ 产品符合欧盟RoHS指令。
The product complies with the EU RoHS directive.

◎ 密封且安全，对安装位置不敏感。
Hermetically sealed and intrinsically safe. Not mounting position sensitive.

◎ 在恶劣环境下，产品触点不会被氧化或污染。
Operates in harsh environments without oxidation or contamination of contacts.

◎ 高压触点间填充有惰性气体。
High voltage isolation between open contacts, inert gas filled contact chamber.

◎ 产品设计与管控符合IATF-16949。
Product design and quality control in accordance to IATF-16949.

◎ 典型应用于车载电池、电机控制器、充电桩、光伏、储能。
Typical applications apply to Battery electric vehicles ,DC motor controller protection,DC charging pile, Photovoltaic controls,Energy Storage systems.

线圈参数 Coil Data

线圈电压 Coil Voltage	动作电压 Pickup Voltage	释放电压 Dropout Voltage	瞬间启动电流 Inrush Current	平均保持电流 Avg. Holding Current	保持功耗 Holding Power
12VDC	9VDC Max	1.2VDC Min	/	0.9A Approx	11W
24VDC	18VDC Max	2.4VDC Min	/	0.5A Approx	12W

备注：1、线圈参数值是环境温度为20℃下的理论值，因线圈电阻的影响以上参数约±10%的变动范围；2、线圈可靠的工作电压范围为85%~110%Us额定电压；3、如需其他额定电压，可特殊订货。
Remarks: 1. The coil parameter values are theoretical values at an ambient temperature of 20 ℃, with a variation range of approximately ± 10% due to the influence of coil resistance; 2. The reliable working voltage range of the coil is 85%~110% of the rated voltage; 3. If other rated voltages are required, special orders can be made.

触点参数 Main Contact

触点形式 Contact Arrangement	1 Form A (SPST-NO)
触点极性 Contact Polarized	无极性 Nonpolarized
接触电阻(初始) Contact Resistance (Initial)	1mΩ (Typical Value)
负载电压 Loda Voltage	12-1000VDC
额定电流 Current (continuous)	100A
机械寿命 Mechanical Life	2×10^5 cycles
电气寿命 Electrical Life	图1 Graph 1
过载电流 Overload Current	图2 Graph 2

备注：1、阻性负载类别(L/R<0.1ms)；2、接通和分断转换频率，ON : OFF=1秒 : 9秒；3、测试环境温度为23±5℃；4、电气寿命是产品带载分断的次数。
Remarks: 1. Resistive load category (L/R<0.1ms); 2. Switching frequency between on and off, ON: OFF=1 sec: 9 sec; 3. The testing environment temperature is 23 ± 5 ℃; 4. The electrical life is the number of times a product breaks under load.

性能参数 Performance Parameter

绝缘电阻 Insulation Resistance	1000MΩ@1000VDC (Initial) ≤50MΩ@1000VDC (End)
介质耐压 Dielectric Withstanding Voltage	AC2500V 1min ≤10mA
动作时间 Operate Time	40ms (Include bounce)
释放时间 Release Time	20ms (Include bounce)
弹跳时间 Bounce Time	5ms
冲击 Shock	20g peak,1/2 sine(Operating)
正弦振动 Sine Vibration	20g peak,80~2000Hz
湿度 Humidity	5%~85%RH
温度 Operating Temperature	-40℃~+85℃
重量 Weight	510g Approx

备注：1、线圈施加额定工作电压，无续流二极管；2、测试环境温度为20℃。
Remarks: 1. Apply rated working voltage to the coil without a freewheeling diode; 2. The testing environment temperature is 20 ℃.

电气寿命参考曲线-图1
Electrical Life Reference Curve-Graph1

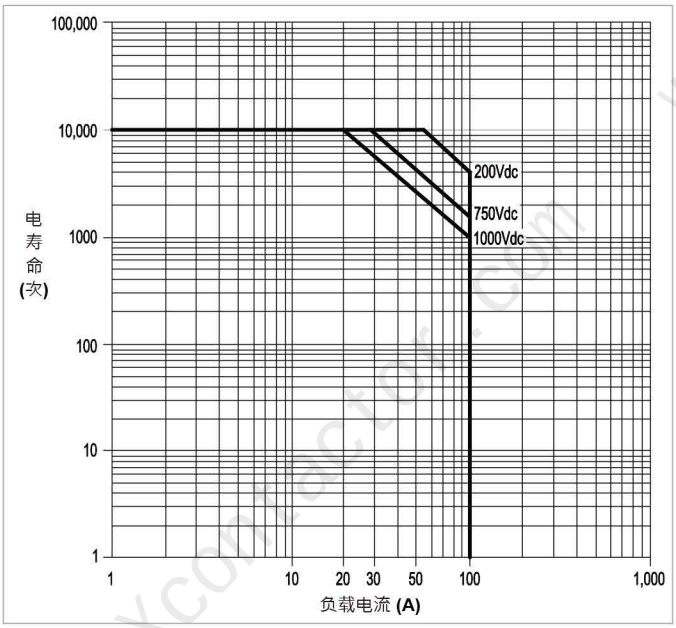

过载电流参考曲线-图2
Overload Current vs Time Reference Curve-Graph2

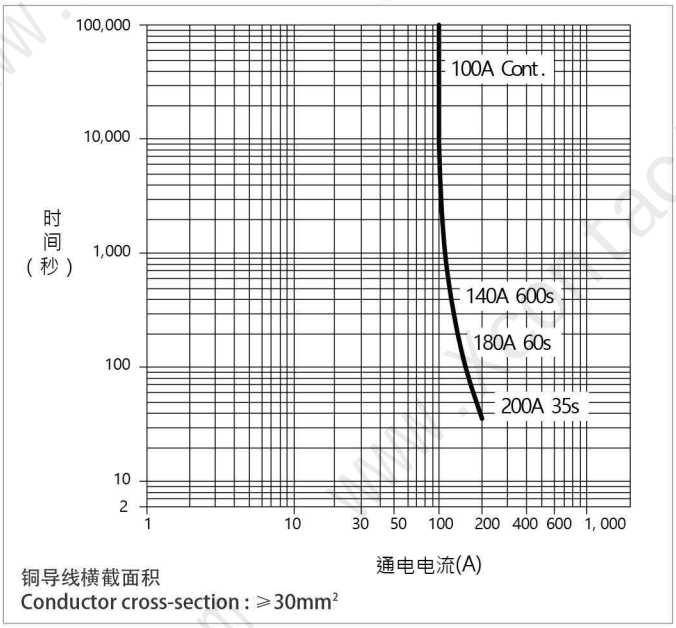

备注：1、以上数据曲线作为设计参考选型，不作为选型熔断器的依据；2、环境温度为23±5℃下。
Remarks: 1. The above data curve is used as a design reference for selection and not as a basis for selecting fuses; 2. At an ambient temperature of 23 ± 5 ℃.

尺寸图&接线原理图 Dimension & Wiring

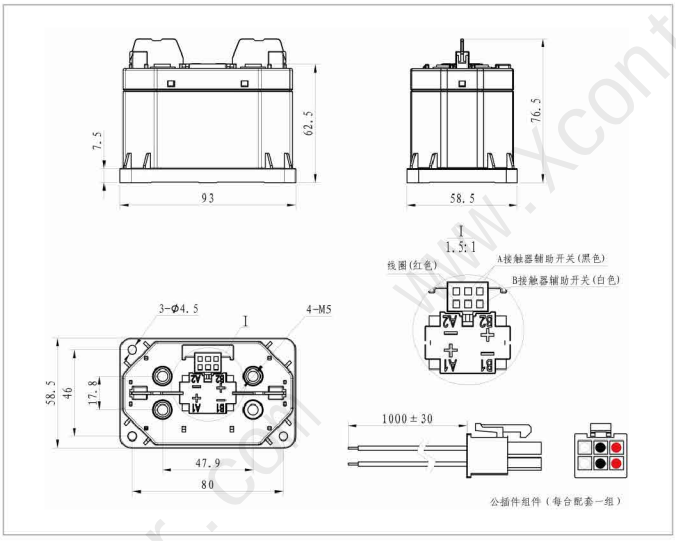

安装紧固件 Fastener	扭力范围 Torque Range	
	主触头接线 Main contacts wiring	底部固定 Product mount
M5×10 (配套提供 Provided)	3.5～4.4N・m	1.8～2.5N・m

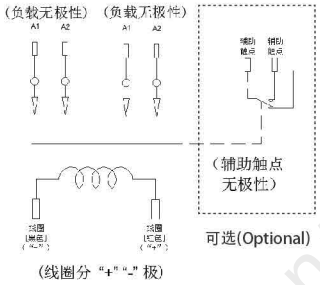

可选(Optional)

（线圈分“+”“-”极）

辅助开关 Aux Contact (可选 Optional):
AC-12:125VAC/3A；DC-12:30V/2A；
100mA/8V(最小电流 Current Min)

备注：
1、尺寸单位：mm，视角：⊕-⊳；
2、未注尺寸公差：
标称值<10mm为±0.3,
标称值10～50mm为±0.6,
标称值>50mm为±1.0;

Remarks:
1.Dimension unit: mm, viewing angle: ⊕-⊳；
2. Undeclared dimensional tolerance:
± 0.3 for nominal values<10mm,
The nominal value of 10-50mm is ± 0.6,±1.0 for nominal values greater than 50mm;

订货说明 Ordering Information

EVQ100 SE 12 D A *

额定电流 Rated Current:
“100”＝100A

触点形式 Main contacts feature:
“SE”＝主触头为一组常开，触头不分极性；1 form A(ON), non-polarized;
“SG”＝主触头为一组常开，触头不分极性，带一组常开辅助触点；
1 form A(ON) add AUX contacts(ON), non-polarized;

线圈电压 Coil Voltage:
“12”＝12VDC
“24”＝24VDC

线圈引出方式 Coil lead out:
“D”＝导线式，不带连接器；Wire Without Connectors
“E”＝导线式，带连接器；Wire With Connectors
（制造商推荐Manufacturer's recommendation）

安装方式 Mounting:
“A”＝立式安装
Bottom mount

产品代码
Product code

特性 Features

◎ 产品符合欧盟RoHS指令。
The product complies with the EU RoHS directive.

◎ 密封且安全，对安装位置不敏感。
Hermetically sealed and intrinsically safe. Not mounting position sensitive.

◎ 在恶劣环境下，产品触点不会被氧化或污染。
Operates in harsh environments without oxidation or contamination of contacts.

◎ 高压触点间填充有惰性气体。
High voltage isolation between open contacts, inert gas filled contact chamber.

◎ 产品设计与管控符合IATF-16949。
Product design and quality control in accordance to IATF-16949.

◎ 典型应用于车载电池、电机控制器、充电桩、光伏、储能。
Typical applications apply to Battery electric vehicles ,DC motor controller protection,DC charging pile, Photovoltaic controls,Energy Storage systems.

线圈参数 Coil Data

线圈电压 Coil Voltage	动作电压 Pickup Voltage	释放电压 Dropout Voltage	线圈电阻 Coil Resistance	平均保持电流 Avg. Holding Current	保持功耗 Holding Power
12VDC	9VDC Max	1.2VDC Min	26Ω	461.5mA	5.5W
24VDC	18VDC Max	2.4VDC Min	96.4Ω	249mA	6W
48VDC	36VDC Max	4.8VDC Min	392Ω	122.5mA	5.9W

备注：1、线圈参数值是环境温度为20℃下的理论值，因线圈电阻的影响以上参数约±10%的变动范围；2、线圈可靠的工作电压范围为85%~110%Us额定电压；3、如需其他额定电压，可特殊订货。
Remarks: 1. The coil parameter values are theoretical values at an ambient temperature of 20 ℃, with a variation range of approximately ± 10% due to the influence of coil resistance; 2. The reliable working voltage range of the coil is 85%~110% of the rated voltage; 3. If other rated voltages are required, special orders can be made.

触点参数 Main Contact

触点形式 Contact Arrangement	1 Form A (SPST-NO)
触点极性 Contact Polarized	无极性 Nonpolarized
接触电阻(初始) Contact Resistance (Initial)	1mΩ (Typical Value)
负载电压 Loda Voltage	12-1500VDC
额定电流 Current (continuous)	135A
机械寿命 Mechanical Life	2×10^5 cycles
电气寿命 Electrical Life	图1 Graph 1
过载电流 Overload Current	图2 Graph 2

备注：1、阻性负载类别(L/R<0.1ms)；2、接通和分断转换频率，ON：OFF=1秒：9秒；3、测试环境温度为23±5℃；4、电气寿命是产品带载分断的次数。
Remarks: 1. Resistive load category (L/R<0.1ms); 2. Switching frequency between on and off, ON: OFF=1 sec: 9 sec; 3. The testing environment temperature is 23 ± 5 ℃; 4. The electrical life is the number of times a product breaks under load.

性能参数 Performance Parameter

绝缘电阻 Insulation Resistance	1000MΩ@1000VDC (Initial) ≤50MΩ@1000VDC (End)
介质耐压 Dielectric Withstanding Voltage	AC3500V 1min ≤10mA
动作时间 Operate Time	30ms (Include bounce)
释放时间 Release Time	12ms (Include bounce)
弹跳时间 Bounce Time	5ms
冲击 Shock	20g peak,1/2 sine(Operating)
正弦振动 Sine Vibration	20g peak,80~2000Hz
湿度 Humidity	5%~85%RH
温度 Operating Temperature	-40℃~+85℃
重量 Weight	190g Approx

备注：1、线圈施加额定工作电压，无续流二极管；2、测试环境温度为20℃。
Remarks: 1. Apply rated working voltage to the coil without a freewheeling diode; 2. The testing environment temperature is 20 ℃.

电气寿命参考曲线-图1
Electrical Life Reference Curve-Graph1

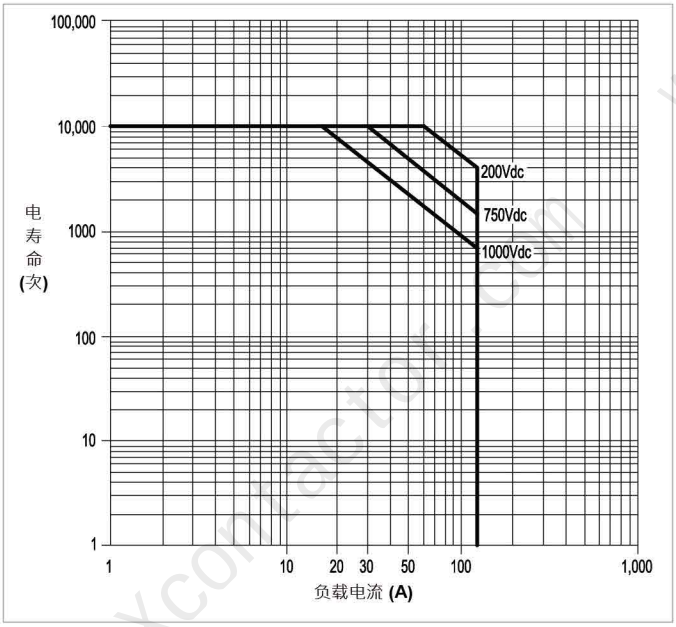

过载电流参考曲线-图2
Overload Current vs Time Reference Curve-Graph2

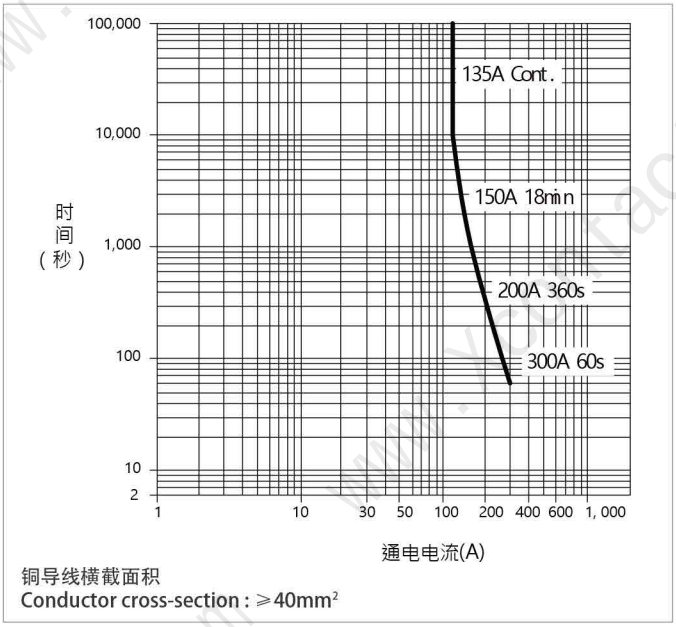

备注：1、以上数据曲线作为设计参考选型，不作为选型熔断器的依据；2、环境温度为23±5℃下。
Remarks: 1.The above data curve is used as a design reference for selection and not as a basis for selecting fuses; 2. At an ambient temperature of 23 ± 5 ℃.

尺寸图&接线原理图 Dimension & Wiring

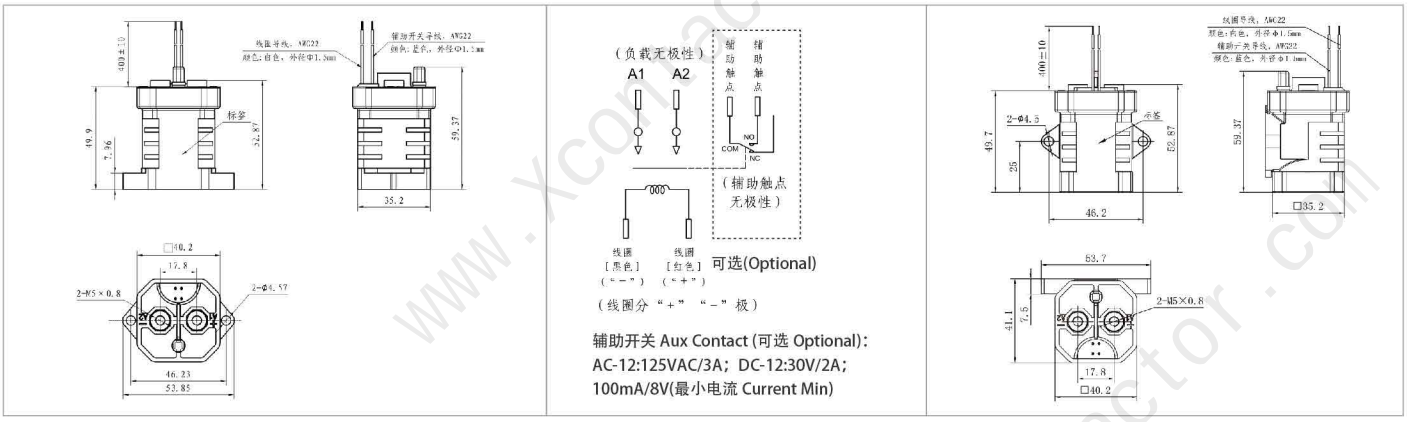

安装紧固件 Fastener	扭力范围 Torque Range	
	主触头接线 Main contacts wiring	底部固定 Product mount
M5×10 (配套提供 Provided)	3.5～4.4N・m	1.8～2.5N・m

备注：
1、尺寸单位：mm，视角：⊕-▷；
2、未注尺寸公差：标称值<10mm为±0.3，标称值10～50mm为±0.6，标称值>50mm为±1.0；

Remarks:
1.Dimension unit: mm, viewing angle: ⊕-▷；
2. Undeclared dimensional tolerance:± 0.3 for nominal values<10mm,The nominal value of 10-50mm is ± 0.6,±1.0 for nominal values greater than 50mm;

订货说明 Ordering Information

EVQ135 E 12 D A 2***

额定电流 Rated Current:
"135"＝135A

线圈电压 Coil Voltage:
"12"＝12VDC
"24"＝24VDC
"48"＝48VDC

安装方式Mounting:
"A"＝立式安装 Bottom mount
"S"＝卧式安装 Side mount

产品代码
Product code

触点形式 Main contacts feature:
"E"＝主触头为一组常开，触头不分极性；1 form A(ON), non-polarized;
"G"＝主触头为一组常开，触头不分极性，带一组常开辅助触点；
1 form A(ON) add AUX contacts(ON), non-polarized;

线圈引出方式 Coil lead out:
"D"＝导线式，不带连接器；Wire Without Connectors
"E"＝导线式，带连接器;Wire With Connectors
（制造商推荐Manufacturer's recommendation）

EVQ135 Series-S

135A 直流接触器 DC Contactor

特性 Features

◎ 产品符合欧盟RoHS指令。
The product complies with the EU RoHS directive.

◎ 密封且安全，对安装位置不敏感。
Hermetically sealed and intrinsically safe. Not mounting position sensitive.

◎ 在恶劣环境下，产品触点不会被氧化或污染。
Operates in harsh environments without oxidation or contamination of contacts.

◎ 高压触点间填充有惰性气体。
High voltage isolation between open contacts, inert gas filled contact chamber.

◎ 产品设计与管控符合IATF-16949。
Product design and quality control in accordance to IATF-16949.

◎ 典型应用于车载电池、电机控制器、充电桩、光伏、储能。
Typical applications apply to Battery electric vehicles ,DC motor controller protection,DC charging pile, Photovoltaic controls,Energy Storage systems.

线圈参数 Coil Data

线圈电压 Coil Voltage	动作电压 Pickup Voltage	释放电压 Dropout Voltage	瞬间启动电流 Inrush Current	平均保持电流 Avg. Holding Current	保持功耗 Holding Power
12VDC	9VDC Max	1.2VDC Min	/	0.9A Approx	11W
24VDC	18VDC Max	2.4VDC Min	/	0.5A Approx	12W

备注：1、线圈参数值是环境温度为20℃下的理论值，因线圈电阻的影响以上参数约±10%的变动范围；2、线圈可靠的工作电压范围为85%~110%Us额定电压；3、如需其他额定电压，可特殊订货。
Remarks: 1. The coil parameter values are theoretical values at an ambient temperature of 20 ℃, with a variation range of approximately ± 10% due to the influence of coil resistance; 2. The reliable working voltage range of the coil is 85%~110% of the rated voltage; 3. If other rated voltages are required, special orders can be made.

触点参数 Main Contact

触点形式 Contact Arrangement	1 Form A (SPST-NO)
触点极性 Contact Polarized	无极性 Nonpolarized
接触电阻(初始) Contact Resistance (Initial)	1mΩ (Typical Value)
负载电压 Loda Voltage	12-1000VDC
额定电流 Current (continuous)	135A
机械寿命 Mechanical Life	2×10^5 cycles
电气寿命 Electrical Life	图1 Graph 1
过载电流 Overload Current	图2 Graph 2

备注：1、阻性负载类别(L/R<0.1ms)；2、接通和分断转换频率，ON：OFF=1秒：9秒；3、测试环境温度为23±5℃；4、电气寿命是产品带载分断的次数。
Remarks: 1. Resistive load category (L/R<0.1ms); 2. Switching frequency between on and off, ON: OFF=1 sec: 9 sec; 3. The testing environment temperature is 23 ± 5 ℃; 4. The electrical life is the number of times a product breaks under load.

性能参数 Performance Parameter

绝缘电阻 Insulation Resistance	1000MΩ@1000VDC (Initial) ≤50MΩ@1000VDC (End)
介质耐压 Dielectric Withstanding Voltage	AC2500V 1min ≤10mA
动作时间 Operate Time	40ms (Include bounce)
释放时间 Release Time	20ms (Include bounce)
弹跳时间 Bounce Time	5ms
冲击 Shock	20g peak,1/2 sine(Operating)
正弦振动 Sine Vibration	20g peak,80~2000Hz
湿度 Humidity	5%~85%RH
温度 Operating Temperature	-40℃~+85℃
重量 Weight	510g Approx

备注：1、线圈施加额定工作电压，无续流二极管；2、测试环境温度为20℃。
Remarks: 1. Apply rated working voltage to the coil without a freewheeling diode; 2. The testing environment temperature is 20 ℃.

电气寿命参考曲线-图1
Electrical Life Reference Curve-Graph1

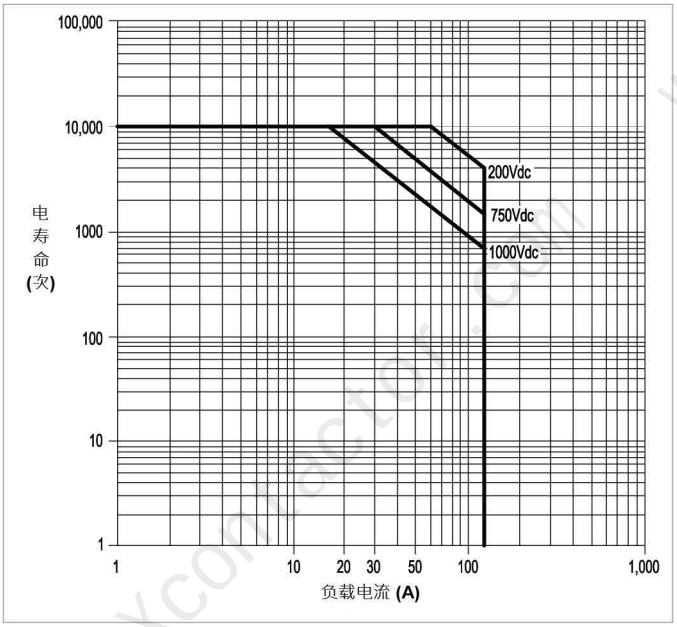

过载电流参考曲线-图2
Overload Current vs Time Reference Curve-Graph2

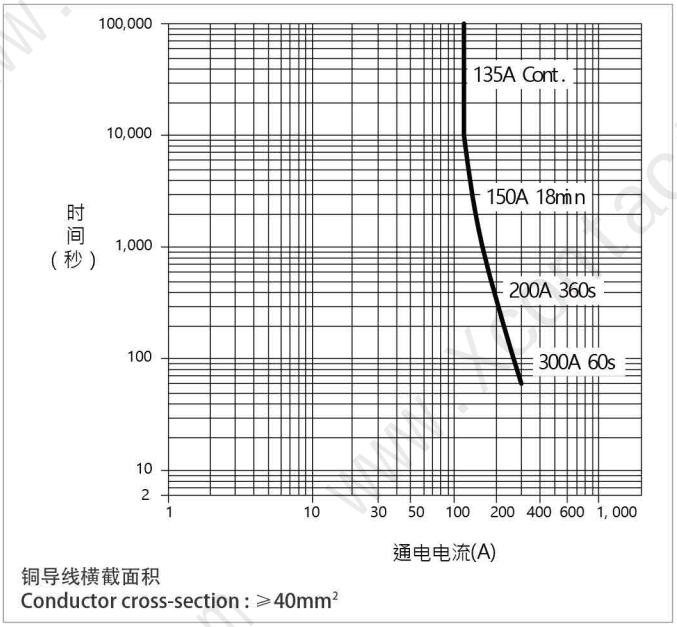

备注：1、以上数据曲线作为设计参考选型，不作为选型熔断器的依据；2、环境温度为23±5℃下。
Remarks: 1. The above data curve is used as a design reference for selection and not as a basis for selecting fuses; 2. At an ambient temperature of 23 ± 5 ℃.

尺寸图&接线原理图 Dimension & Wiring

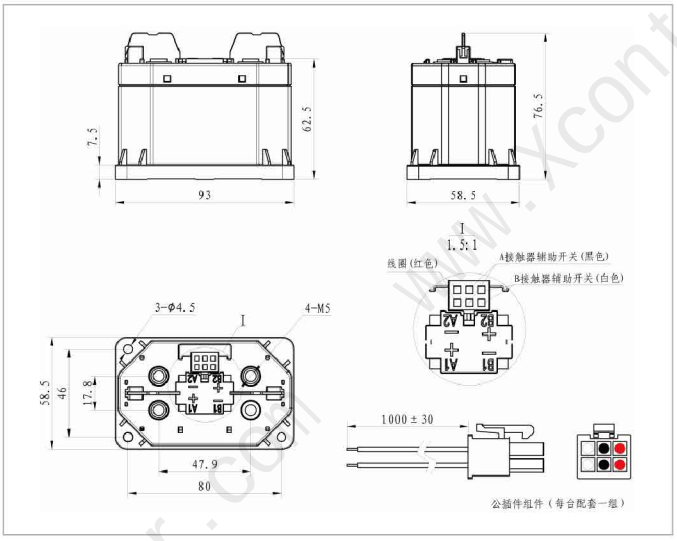

安装紧固件 Fastener	扭力范围 Torque Range	
	主触头接线 Main contacts wiring	底部固定 Product mount
M5×10 (配套提供 Provided)	3.5～4.4N・m	1.8～2.5N・m

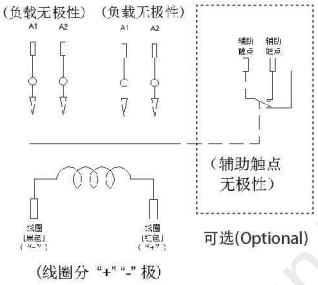

辅助开关 Aux Contact (可选 Optional):
AC-12:125VAC/3A；DC-12:30V/2A；
100mA/8V(最小电流 Current Min)

备注：
1、尺寸单位：mm，视角：⊕-⊳；
2、未注尺寸公差：
标称值<10mm为±0.3,
标称值10～50mm为±0.6,
标称值>50mm为±1.0;

Remarks:
1.Dimension unit: mm, viewing angle: ⊕-⊳；
2. Undeclared dimensional tolerance:
± 0.3 for nominal values<10mm,
The nominal value of 10-50mm is ± 0.6,±1.0 for nominal values greater than 50mm;

订货说明 Ordering Information

EVQ135 SE 12 D A *

额定电流 Rated Current:
"135"＝135A

触点形式 Main contacts feature:
"SE"＝主触头为一组常开，触头不分极性；1 form A(ON), non-polarized;
"SG"＝主触头为一组常开，触头不分极性，带一组常开辅助触点；
1 form A(ON) add AUX contacts(ON), non-polarized;

线圈电压 Coil Voltage:
"12"＝12VDC
"24"＝24VDC

线圈引出方式 Coil lead out:
"D"＝导线式，不带连接器；Wire Without Connectors
"E"＝导线式，带连接器；Wire With Connectors
(制造商推荐Manufacturer's recommendation)

安装方式 Mounting:
"A"＝立式安装
Bottom mount

产品代码
Product code

EVQ150 Series-2

150A 直流接触器 DC Contactor

特性 Features

◎ 产品符合欧盟RoHS指令。
The product complies with the EU RoHS directive.

◎ 密封且安全，对安装位置不敏感。
Hermetically sealed and intrinsically safe. Not mounting position sensitive.

◎ 在恶劣环境下，产品触点不会被氧化或污染。
Operates in harsh environments without oxidation or contamination of contacts.

◎ 高压触点间填充有惰性气体。
High voltage isolation between open contacts, inert gas filled contact chamber.

◎ 产品设计与管控符合IATF-16949。
Product design and quality control in accordance to IATF-16949.

◎ 典型应用于车载电池、电机控制器、充电桩、光伏、储能。
Typical applications apply to Battery electric vehicles ,DC motor controller protection,DC charging pile, Photovoltaic controls,Energy Storage systems.

线圈参数 Coil Data

线圈电压 Coil Voltage	动作电压 Pickup Voltage	释放电压 Dropout Voltage	线圈电阻 Coil Resistance	平均保持电流 Avg. Holding Current	保持功耗 Holding Power
12VDC	9VDC Max	1.2VDC Min	26Ω	461.5mA	5.5W
24VDC	18VDC Max	2.4VDC Min	96.4Ω	249mA	6W
48VDC	36VDC Max	4.8VDC Min	392Ω	122.5mA	5.9W

备注：1、线圈参数值是环境温度为20℃下的理论值，因线圈电阻的影响以上参数约±10%的变动范围；2、线圈可靠的工作电压范围为85%~110%Us额定电压；3、如需其他额定电压，可特殊订货。
Remarks: 1. The coil parameter values are theoretical values at an ambient temperature of 20 ℃, with a variation range of approximately ± 10% due to the influence of coil resistance; 2. The reliable working voltage range of the coil is 85%~110% of the rated voltage; 3. If other rated voltages are required, special orders can be made.

触点参数 Main Contact

触点形式 Contact Arrangement	1 Form A (SPST-NO)
触点极性 Contact Polarized	无极性 Nonpolarized
接触电阻(初始) Contact Resistance (Initial)	1mΩ (Typical Value)
负载电压 Loda Voltage	12-1000VDC
额定电流 Current (continuous)	150A
机械寿命 Mechanical Life	2×10^5 cycles
电气寿命 Electrical Life	图1 Graph 1
过载电流 Overload Current	图2 Graph 2

备注：1、阻性负载类别(L/R<0.1ms)；2、接通和分断转换频率，ON：OFF=1秒：9秒；3、测试环境温度为23±5℃；4、电气寿命是产品带载分断的次数。
Remarks: 1. Resistive load category (L/R<0.1ms); 2. Switching frequency between on and off, ON: OFF=1 sec: 9 sec; 3. The testing environment temperature is 23 ± 5 ℃; 4. The electrical life is the number of times a product breaks under load.

性能参数 Performance Parameter

绝缘电阻 Insulation Resistance	1000MΩ@1000VDC (Initial) ≤50MΩ@1000VDC (End)
介质耐压 Dielectric Withstanding Voltage	AC3500V 1min ≤10mA
动作时间 Operate Time	30ms (Include bounce)
释放时间 Release Time	12ms (Include bounce)
弹跳时间 Bounce Time	5ms
冲击 Shock	20g peak,1/2 sine(Operating)
正弦振动 Sine Vibration	20g peak,80~2000Hz
湿度 Humidity	5%~85%RH
温度 Operating Temperature	-40℃~+85℃
重量 Weight	190g Approx

备注：1、线圈施加额定工作电压，无续流二极管；2、测试环境温度为20℃。
Remarks: 1. Apply rated working voltage to the coil without a freewheeling diode; 2. The testing environment temperature is 20 ℃.

电气寿命参考曲线-图1
Electrical Life Reference Curve-Graph1

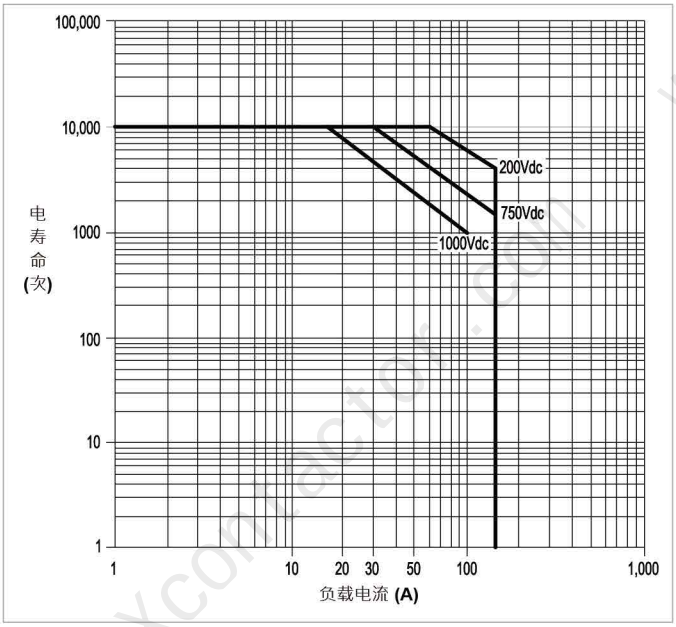

过载电流参考曲线-图2
Overload Current vs Time Reference Curve-Graph2

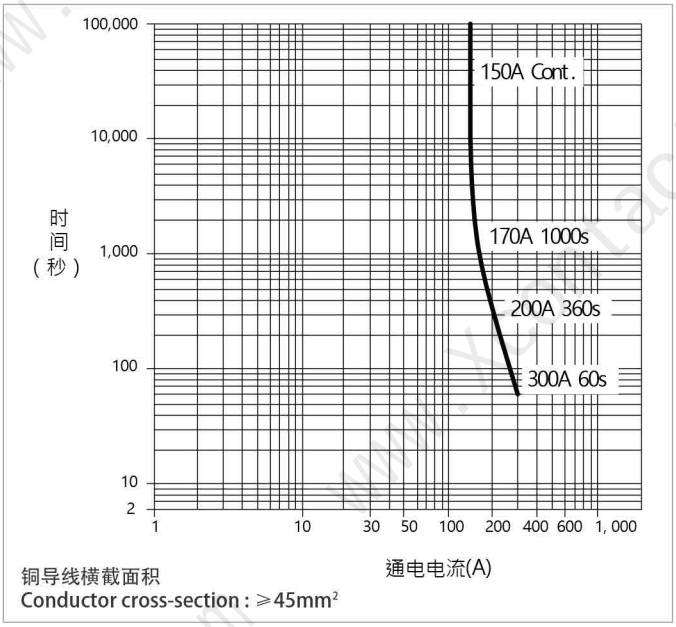

备注：1、以上数据曲线作为设计参考选型，不作为选型熔断器的依据；2、环境温度为23±5℃下。
Remarks: 1. The above data curve is used as a design reference for selection and not as a basis for selecting fuses; 2. At an ambient temperature of 23 ± 5 ℃.

尺寸图&接线原理图 Dimension & Wiring

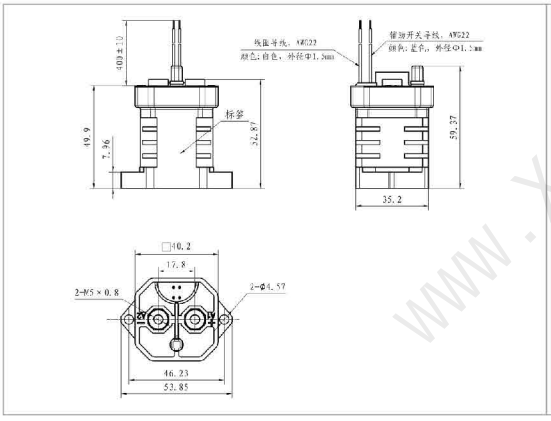

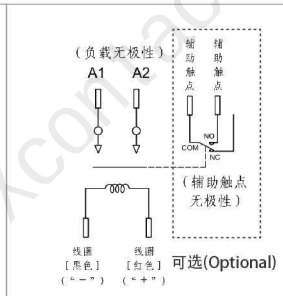

辅助开关 Aux Contact (可选 Optional):
AC-12:125VAC/3A；DC-12:30V/2A；
100mA/8V(最小电流 Current Min)

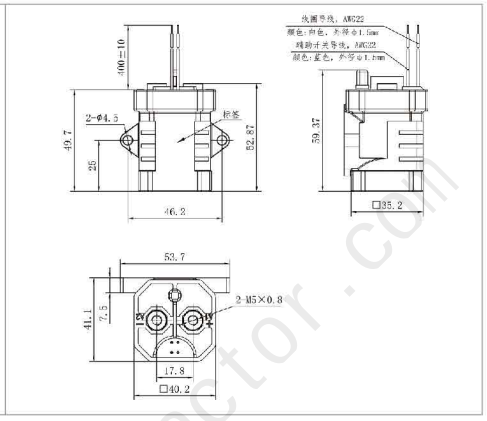

安装紧固件 Fastener	扭力范围 Torque Range	
	主触头接线 Main contacts wiring	底部固定 Product mount
M5×10 (配套提供 Provided)	3.5～4.4N・m	1.8～2.5N・m

备注：
1、尺寸单位：mm，视角：⊕-▷；
2、未注尺寸公差：标称值<10mm为±0.3，标称值10～50mm为±0.6，标称值>50mm为±1.0；

Remarks:
1.Dimension unit: mm, viewing angle: ⊕-▷；
2. Undeclared dimensional tolerance:± 0.3 for nominal values<10mm,The nominal value of 10-50mm is ± 0.6,±1.0 for nominal values greater than 50mm;

订货说明 Ordering Information

EVQ150 E 12 D A 2***

额定电流 Rated Current:
"150"＝150A

触点形式 Main contacts feature:
"E"＝主触头为一组常开，触头不分极性；1 form A(ON), non-polarized;
"G"＝主触头为一组常开，触头不分极性，带一组常开辅助触点；
1 form A(ON) add AUX contacts(ON), non-polarized;

线圈电压 Coil Voltage:
"12"＝12VDC
"24"＝24VDC
"48"＝48VDC

线圈引出方式 Coil lead out:
"D"＝导线式，不带连接器；Wire Without Connectors
"E"＝导线式，带连接器;Wire With Connectors
（制造商推荐Manufacturer's recommendation）

安装方式Mounting:
"A"＝立式安装 Bottom mount
"S"＝卧式安装 Side mount

产品代码
Product code

特性 Features

◎ 产品符合欧盟RoHS指令。
The product complies with the EU RoHS directive.

◎ 密封且安全，对安装位置不敏感。
Hermetically sealed and intrinsically safe. Not mounting position sensitive.

◎ 在恶劣环境下，产品触点不会被氧化或污染。
Operates in harsh environments without oxidation or contamination of contacts.

◎ 高压触点间填充有惰性气体。
High voltage isolation between open contacts, inert gas filled contact chamber.

◎ 产品设计与管控符合IATF-16949。
Product design and quality control in accordance to IATF-16949.

◎ 典型应用于车载电池、电机控制器、充电桩、光伏、储能。
Typical applications apply to Battery electric vehicles ,DC motor controller protection,DC charging pile, Photovoltaic controls,Energy Storage systems.

线圈参数 Coil Data

线圈电压 Coil Voltage	动作电压 Pickup Voltage	释放电压 Dropout Voltage	线圈电阻 Coil Resistance	平均保持电流 Avg. Holding Current	保持功耗 Holding Power
12VDC	9VDC Max	1.2VDC Min	25Ω	480mA	5.8W
24VDC	18VDC Max	2.4VDC Min	120Ω	200mA	4.8W
48VDC	36VDC Max	4.8VDC Min	410Ω	117mA	5.6W

备注：1、线圈参数值是环境温度为20℃下的理论值，因线圈电阻的影响以上参数约±10%的变动范围；2、线圈可靠的工作电压范围为85%~110%Us额定电压；3、如需其他额定电压，可特殊订货。
Remarks: 1. The coil parameter values are theoretical values at an ambient temperature of 20 ℃, with a variation range of approximately ± 10% due to the influence of coil resistance; 2. The reliable working voltage range of the coil is 85%~110% of the rated voltage; 3. If other rated voltages are required, special orders can be made.

触点参数 Main Contact

触点形式 Contact Arrangement	1 Form A (SPST-NO)
触点极性 Contact Polarized	无极性 Nonpolarized
接触电阻(初始) Contact Resistance (Initial)	1mΩ (Typical Value)
负载电压 Loda Voltage	12-1500VDC
额定电流 Current (continuous)	150A
机械寿命 Mechanical Life	2×10^5 cycles
电气寿命 Electrical Life	图1 Graph 1
过载电流 Overload Current	图2 Graph 2

备注：1、阻性负载类别(L/R<0.1ms)；2、接通和分断转换频率，ON : OFF=1秒 : 9秒；3、测试环境温度为23±5℃；4、电气寿命是产品带载分断的次数。
Remarks: 1. Resistive load category (L/R<0.1ms); 2. Switching frequency between on and off, ON: OFF=1 sec: 9 sec; 3. The testing environment temperature is 23 ± 5 ℃; 4. The electrical life is the number of times a product breaks under load.

性能参数 Performance Parameter

绝缘电阻 Insulation Resistance	1000MΩ@2500VDC (Initial) ≤50MΩ@1000VDC (End)
介质耐压 Dielectric Withstanding Voltage	AC3500V 1min ≤10mA
动作时间 Operate Time	30ms (Include bounce)
释放时间 Release Time	12ms (Include bounce)
弹跳时间 Bounce Time	5ms
冲击 Shock	20g peak,1/2 sine(Operating)
正弦振动 Sine Vibration	20g peak,80~2000Hz
湿度 Humidity	5%~85%RH
温度 Operating Temperature	-40℃~+85℃
重量 Weight	355g Approx

备注：1、线圈施加额定工作电压，无续流二极管；2、测试环境温度为20℃。
Remarks: 1. Apply rated working voltage to the coil without a freewheeling diode; 2. The testing environment temperature is 20 ℃.

电气寿命参考曲线-图1
Electrical Life Reference Curve-Graph1

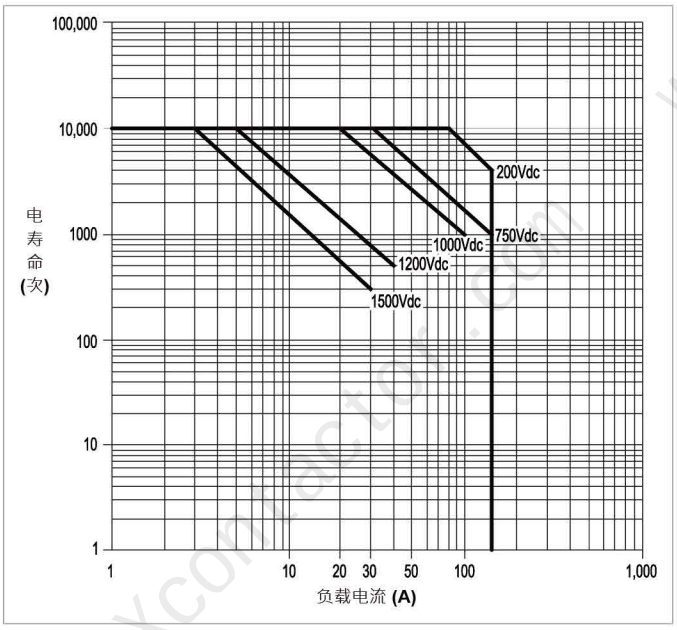

过载电流参考曲线-图2
Overload Current vs Time Reference Curve-Graph2

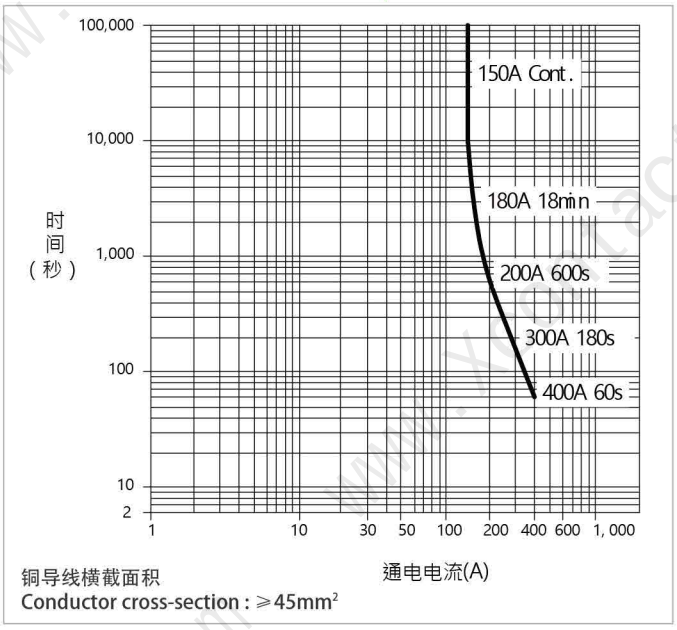

备注：1、以上数据曲线作为设计参考选型，不作为选型熔断器的依据；2、环境温度为23±5℃下。
Remarks: 1. The above data curve is used as a design reference for selection and not as a basis for selecting fuses; 2. At an ambient temperature of 23 ± 5 ℃.

尺寸图&接线原理图 Dimension & Wiring

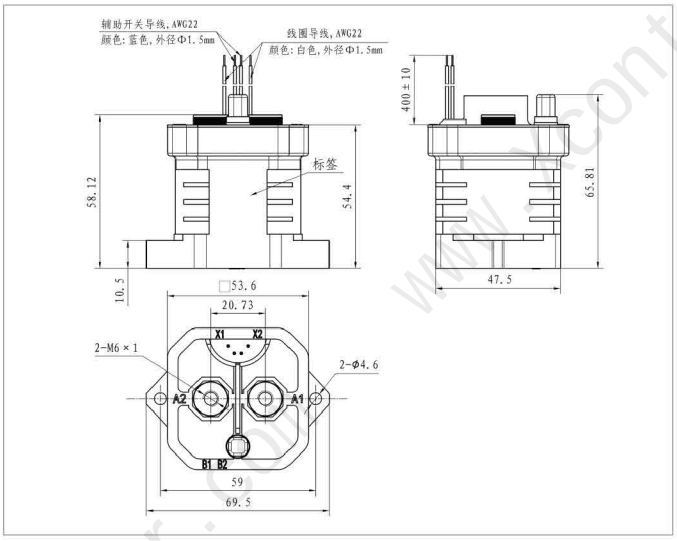

安装紧固件 Fastener	扭力范围 Torque Range	
	主触头接线 Main contacts wiring	底部固定 Product mount
M6×12 (配套提供 Provided)	4.5～6.5N・m	1.8～2.5N・m

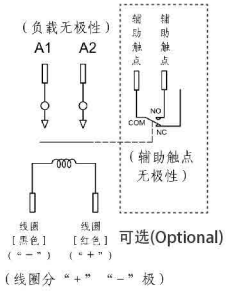

辅助开关 Aux Contact (可选 Optional):
AC-12:125VAC/3A；DC-12:30V/2A；
100mA/8V(最小电流 Current Min)

备注：
1、尺寸单位：mm，视角：⊕-⊳；
2、未注尺寸公差：
标称值<10mm为±0.3,
标称值10～50mm为±0.6,
标称值>50mm为±1.0;

Remarks:
1.Dimension unit: mm, viewing angle: ⊕-⊳；
2. Undeclared dimensional tolerance:
± 0.3 for nominal values<10mm,
The nominal value of 10-50mm is ± 0.6,±1.0 for nominal values greater than 50mm;

订货说明 Ordering Information

EVQ150 E 12 D A 3***

额定电流 Rated Current:
“150”＝150A

触点形式 Main contacts feature:
“E”＝主触头为一组常开，触头不分极性；1 form A(ON), non-polarized;
“G”＝主触头为一组常开，触头不分极性，带一组常开辅助触点；
1 form A(ON) add AUX contacts(ON), non-polarized;

线圈电压 Coil Voltage:
“12”＝12VDC
“24”＝24VDC
“48”＝48VDC

线圈引出方式 Coil lead out:
“D”＝导线式，不带连接器；Wire Without Connectors
“E”＝导线式，带连接器;Wire With Connectors
(制造商推荐Manufacturer's recommendation)

安装方式 Mounting:
“A”＝立式安装
Bottom mount

产品代码
Product code

EVQ150 Series-5

150A 直流接触器 DC Contactor

特性 Features

◎ 产品符合欧盟RoHS指令。
The product complies with the EU RoHS directive.

◎ 密封且安全，对安装位置不敏感。
Hermetically sealed and intrinsically safe. Not mounting position sensitive.

◎ 在恶劣环境下，产品触点不会被氧化或污染。
Operates in harsh environments without oxidation or contamination of contacts.

◎ 高压触点间填充有惰性气体。
High voltage isolation between open contacts, inert gas filled contact chamber.

◎ 产品设计与管控符合IATF-16949。
Product design and quality control in accordance to IATF-16949.

◎ 典型应用于车载电池、电机控制器、充电桩、光伏、储能。
Typical applications apply to Battery electric vehicles ,DC motor controller protection,DC charging pile, Photovoltaic controls,Energy Storage systems.

线圈参数 Coil Data

线圈电压 Coil Voltage	动作电压 Pickup Voltage	释放电压 Dropout Voltage	瞬间启动电流 Inrush Current	平均保持电流 Avg. Holding Current	保持功耗 Holding Power
12VDC	9VDC Max	1.2VDC Min	3.8A Max	0.5A Approx	6W Max
24VDC	18VDC Max	2.4VDC Min	2A Max	0.25A Approx	6W Max

备注：1、线圈参数值是环境温度为20℃下的理论值，因线圈电阻的影响以上参数约±10%的变动范围；2、线圈可靠的工作电压范围为85%~110%Us额定电压；3、如需其他额定电压，可特殊订货。
Remarks: 1. The coil parameter values are theoretical values at an ambient temperature of 20 ℃, with a variation range of approximately ± 10% due to the influence of coil resistance; 2. The reliable working voltage range of the coil is 85%~110% of the rated voltage; 3. If other rated voltages are required, special orders can be made.

触点参数 Main Contact

触点形式 Contact Arrangement	1 Form A (SPST-NO)
触点极性 Contact Polarized	无极性 Nonpolarized
接触电阻(初始) Contact Resistance (Initial)	1mΩ (Typical Value)
负载电压 Loda Voltage	12-1500VDC
额定电流 Current (continuous)	150A
机械寿命 Mechanical Life	2×10^5 cycles
电气寿命 Electrical Life	图1 Graph 1
过载电流 Overload Current	图2 Graph 2

备注：1、阻性负载类别(L/R<0.1ms)；2、接通和分断转换频率，ON : OFF=1秒 : 9秒；3、测试环境温度为23±5℃；4、电气寿命是产品带载分断的次数。
Remarks: 1. Resistive load category (L/R<0.1ms); 2. Switching frequency between on and off, ON: OFF=1 sec: 9 sec; 3. The testing environment temperature is 23 ± 5 ℃; 4. The electrical life is the number of times a product breaks under load.

性能参数 Performance Parameter

绝缘电阻 Insulation Resistance	1000MΩ@2500VDC (Initial) ≤50MΩ@1000VDC (End)
介质耐压 Dielectric Withstanding Voltage	AC3500V 1min ≤10mA
动作时间 Operate Time	30ms (Include bounce)
释放时间 Release Time	12ms (Include bounce)
弹跳时间 Bounce Time	5ms
冲击 Shock	20g peak,1/2 sine(Operating)
正弦振动 Sine Vibration	20g peak,80~2000Hz
湿度 Humidity	5%~85%RH
温度 Operating Temperature	-40℃~+85℃
重量 Weight	470g Approx

备注：1、线圈施加额定工作电压，无续流二极管；2、测试环境温度为20℃。
Remarks: 1. Apply rated working voltage to the coil without a freewheeling diode; 2. The testing environment temperature is 20 ℃.

电气寿命参考曲线-图1
Electrical Life Reference Curve-Graph1

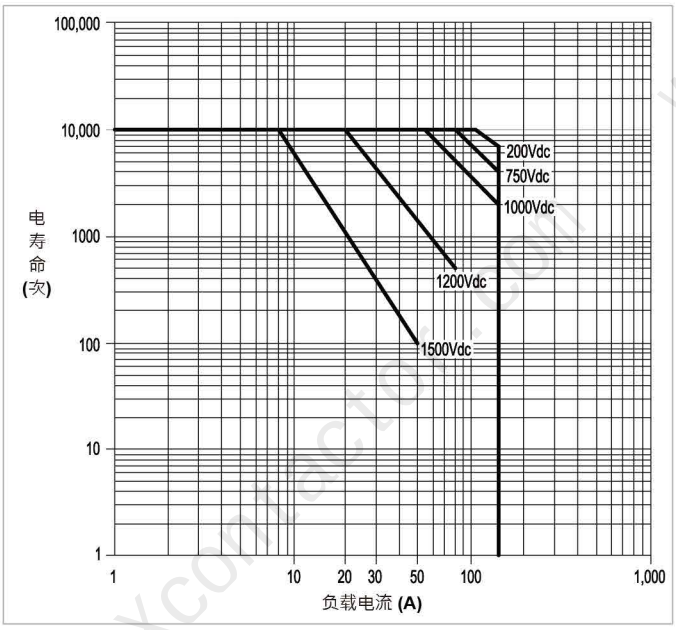

过载电流参考曲线-图2
Overload Current vs Time Reference Curve-Graph2

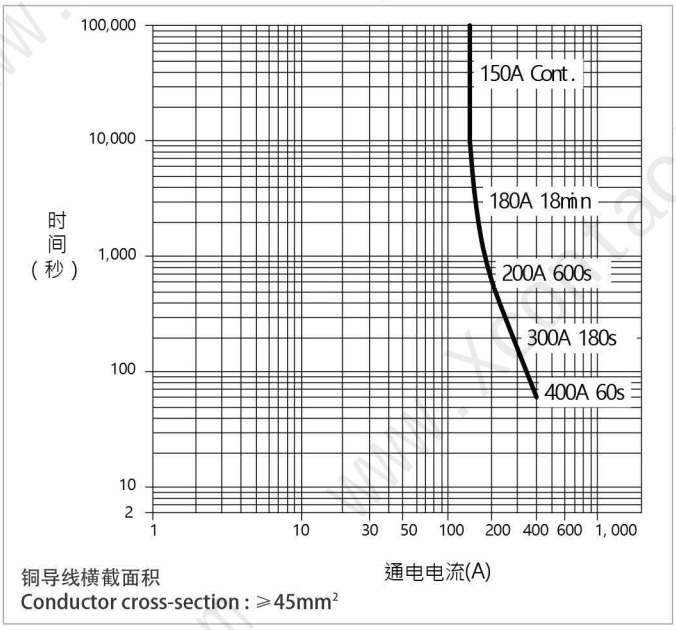

备注：1、以上数据曲线作为设计参考选型，不作为选型熔断器的依据；2、环境温度为23±5℃下。
Remarks: 1. The above data curve is used as a design reference for selection and not as a basis for selecting fuses; 2. At an ambient temperature of 23 ± 5 ℃.

尺寸图&接线原理图 Dimension & Wiring

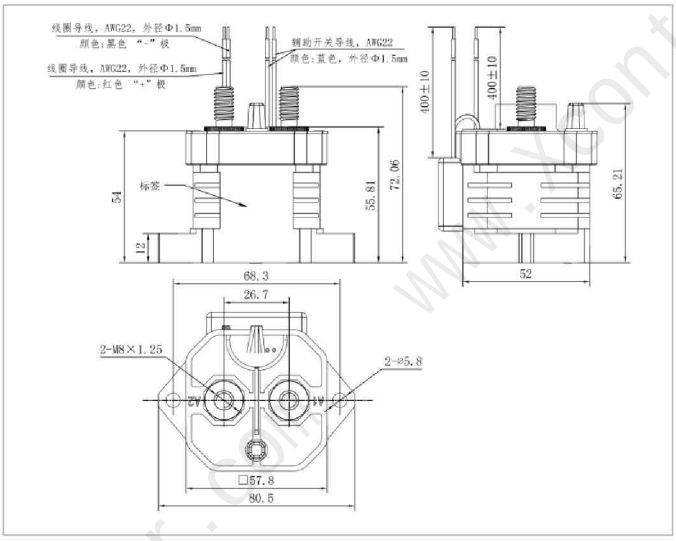

安装紧固件 Fastener	扭力范围 Torque Range	
	主触头接线 Main contacts wiring	底部固定 Product mount
M8 (配套提供 Provided)	9～12N・m	1.8～3.5N・m

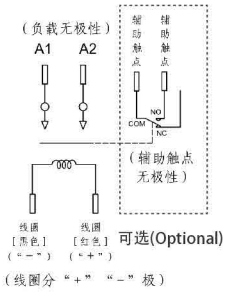

辅助开关 Aux Contact (可选 Optional):
AC-12:125VAC/3A；DC-12:30V/2A；
100mA/8V(最小电流 Current Min)

备注：
1、尺寸单位：mm，视角：⊕-⊳；
2、未注尺寸公差：
标称值<10mm为±0.3,
标称值10～50mm为±0.6,
标称值>50mm为±1.0;

Remarks:
1.Dimension unit: mm, viewing angle: ⊕-⊳；
2. Undeclared dimensional tolerance:
± 0.3 for nominal values<10mm,
The nominal value of 10-50mm is ± 0.6,±1.0 for nominal values greater than 50mm;

订货说明 Ordering Information

EVQ150 E 12 D A 5***

额定电流 Rated Current:
"150"＝150A

触点形式 Main contacts feature:
"E"＝主触头为一组常开，触头不分极性；1 form A(ON), non-polarized;
"G"＝主触头为一组常开，触头不分极性，带一组常开辅助触点；
1 form A(ON) add AUX contacts(ON), non-polarized;

线圈电压 Coil Voltage:
"12"＝12VDC
"24"＝24VDC

线圈引出方式 Coil lead out:
"D"＝导线式，不带连接器；Wire Without Connectors
"E"＝导线式，带连接器；Wire With Connectors
（制造商推荐Manufacturer's recommendation）

安装方式 Mounting:
"A"＝立式安装
Bottom mount

产品代码
Product code

EVQ200 Series-3

200A 直流接触器 DC Contactor

特性 Features

◎ 产品符合欧盟RoHS指令。
The product complies with the EU RoHS directive.

◎ 密封且安全，对安装位置不敏感。
Hermetically sealed and intrinsically safe. Not mounting position sensitive.

◎ 在恶劣环境下，产品触点不会被氧化或污染。
Operates in harsh environments without oxidation or contamination of contacts.

◎ 高压触点间填充有惰性气体。
High voltage isolation between open contacts, inert gas filled contact chamber.

◎ 产品设计与管控符合IATF-16949。
Product design and quality control in accordance to IATF-16949.

◎ 典型应用于车载电池、电机控制器、充电桩、光伏、储能。
Typical applications apply to Battery electric vehicles ,DC motor controller protection,DC charging pile, Photovoltaic controls,Energy Storage systems.

线圈参数 Coil Data

线圈电压 Coil Voltage	动作电压 Pickup Voltage	释放电压 Dropout Voltage	线圈电阻 Coil Resistance	平均保持电流 Avg. Holding Current	保持功耗 Holding Power
12VDC	9VDC Max	1.2VDC Min	25Ω	480mA	5.8W
24VDC	18VDC Max	2.4VDC Min	120Ω	200mA	4.8W
48VDC	36VDC Max	4.8VDC Min	410Ω	117mA	5.6W

备注：1、线圈参数值是环境温度为20℃下的理论值，因线圈电阻的影响以上参数约±10%的变动范围；2、线圈可靠的工作电压范围为85%~110%Us额定电压；3、如需其他额定电压，可特殊订货。
Remarks: 1. The coil parameter values are theoretical values at an ambient temperature of 20 ℃, with a variation range of approximately ± 10% due to the influence of coil resistance; 2. The reliable working voltage range of the coil is 85%~110% of the rated voltage; 3. If other rated voltages are required, special orders can be made.

触点参数 Main Contact

触点形式 Contact Arrangement	1 Form A (SPST-NO)
触点极性 Contact Polarized	无极性 Nonpolarized
接触电阻(初始) Contact Resistance (Initial)	1mΩ (Typical Value)
负载电压 Loda Voltage	12-1000VDC
额定电流 Current (continuous)	200A
机械寿命 Mechanical Life	2×10^5 cycles
电气寿命 Electrical Life	图1 Graph 1
过载电流 Overload Current	图2 Graph 2

备注：1、阻性负载类别(L/R<0.1ms)；2、接通和分断转换频率，ON : OFF=1秒 : 9秒；3、测试环境温度为23±5℃；4、电气寿命是产品带载分断的次数。
Remarks: 1. Resistive load category (L/R<0.1ms); 2. Switching frequency between on and off, ON: OFF=1 sec: 9 sec; 3. The testing environment temperature is 23 ± 5 ℃; 4. The electrical life is the number of times a product breaks under load.

性能参数 Performance Parameter

绝缘电阻 Insulation Resistance	1000MΩ@1000VDC (Initial) ≤50MΩ@1000VDC (End)
介质耐压 Dielectric Withstanding Voltage	AC2500V 1min ≤10mA
动作时间 Operate Time	30ms (Include bounce)
释放时间 Release Time	12ms (Include bounce)
弹跳时间 Bounce Time	5ms
冲击 Shock	20g peak,1/2 sine(Operating)
正弦振动 Sine Vibration	20g peak,80~2000Hz
湿度 Humidity	5%~85%RH
温度 Operating Temperature	-40℃~+85℃
重量 Weight	355g Approx

备注：1、线圈施加额定工作电压，无续流二极管；2、测试环境温度为20℃。
Remarks: 1. Apply rated working voltage to the coil without a freewheeling diode; 2. The testing environment temperature is 20 ℃.

电气寿命参考曲线-图1
Electrical Life Reference Curve-Graph1

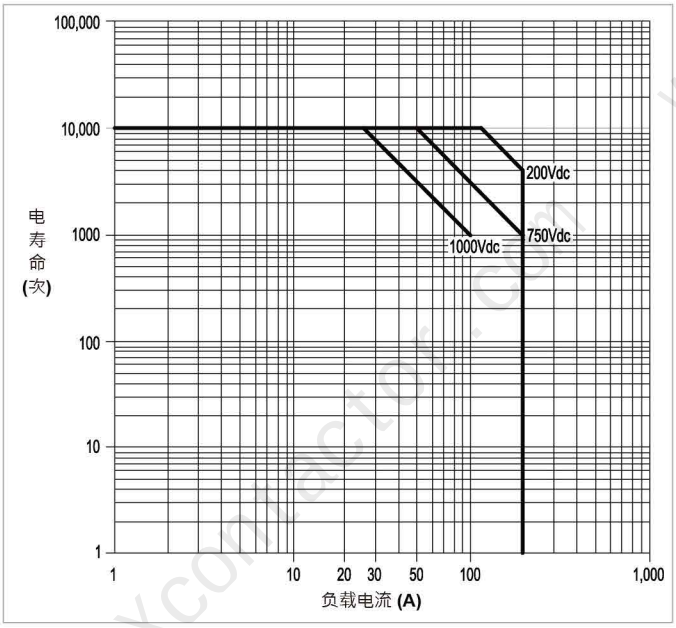

过载电流参考曲线-图2
Overload Current vs Time Reference Curve-Graph2

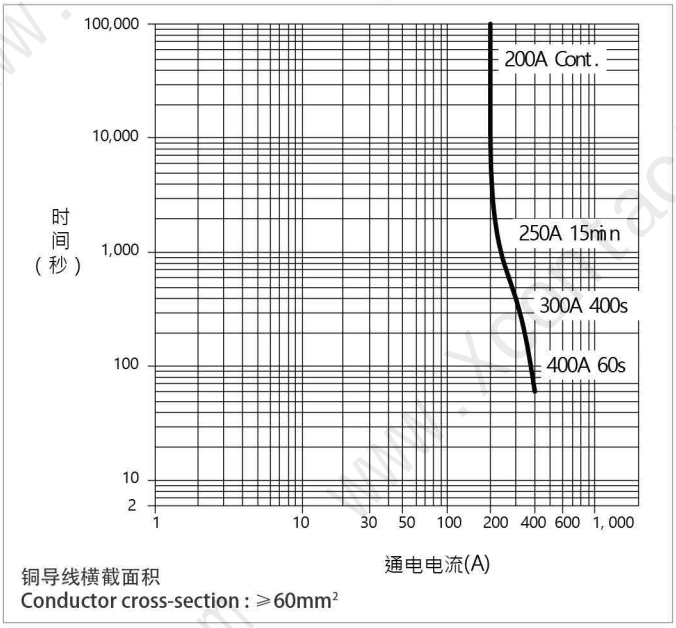

备注：1、以上数据曲线作为设计参考选型，不作为选型熔断器的依据；2、环境温度为23±5℃下。
Remarks: 1. The above data curve is used as a design reference for selection and not as a basis for selecting fuses; 2. At an ambient temperature of 23 ± 5 ℃.

尺寸图&接线原理图 Dimension & Wiring

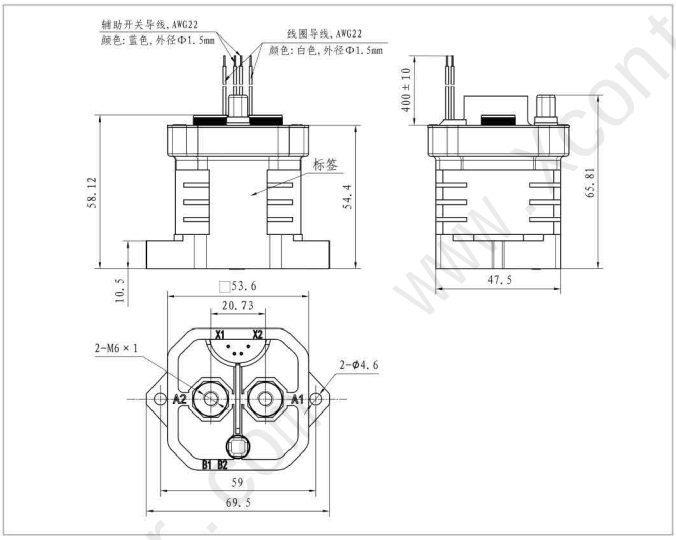

安装紧固件 Fastener	扭力范围 Torque Range	
	主触头接线 Main contacts wiring	底部固定 Product mount
M6×12 (配套提供 Provided)	4.5～6.5N・m	1.8～2.5N・m

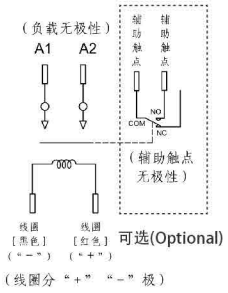

辅助开关 Aux Contact (可选 Optional):
AC-12:125VAC/3A；DC-12:30V/2A；
100mA/8V(最小电流 Current Min)

备注:
1、尺寸单位：mm，视角：
2、未注尺寸公差：
标称值<10mm为±0.3,
标称值10～50mm为±0.6,
标称值>50mm为±1.0;

Remarks:
1.Dimension unit: mm, viewing angle:
2. Undeclared dimensional tolerance:
± 0.3 for nominal values<10mm,
The nominal value of 10-50mm is ± 0.6,±1.0 for nominal values greater than 50mm;

订货说明 Ordering Information

EVQ200 E 12 D A 3***

额定电流 Rated Current:
"200"＝200A

触点形式 Main contacts feature:
"E"＝主触头为一组常开，触头不分极性；1 form A(ON), non-polarized;
"G"＝主触头为一组常开，触头不分极性，带一组常开辅助触点；
1 form A(ON) add AUX contacts(ON), non-polarized;

线圈电压 Coil Voltage:
"12"＝12VDC
"24"＝24VDC
"48"＝48VDC

线圈引出方式 Coil lead out:
"D"＝导线式，不带连接器；Wire Without Connectors
"E"＝导线式，带连接器;Wire With Connectors
(制造商推荐Manufacturer's recommendation)

安装方式 Mounting:
"A"＝立式安装
Bottom mount

产品代码
Product code

EVQ200 Series-5

200A 直流接触器 DC Contactor

特性 Features

◎ 产品符合欧盟RoHS指令。
The product complies with the EU RoHS directive.

◎ 密封且安全，对安装位置不敏感。
Hermetically sealed and intrinsically safe. Not mounting position sensitive.

◎ 在恶劣环境下，产品触点不会被氧化或污染。
Operates in harsh environments without oxidation or contamination of contacts.

◎ 高压触点间填充有惰性气体。
High voltage isolation between open contacts, inert gas filled contact chamber.

◎ 产品设计与管控符合IATF-16949。
Product design and quality control in accordance to IATF-16949.

◎ 典型应用于车载电池、电机控制器、充电桩、光伏、储能。
Typical applications apply to Battery electric vehicles ,DC motor controller protection,DC charging pile, Photovoltaic controls,Energy Storage systems.

线圈参数 Coil Data

线圈电压 Coil Voltage	动作电压 Pickup Voltage	释放电压 Dropout Voltage	瞬间启动电流 Inrush Current	平均保持电流 Avg. Holding Current	保持功耗 Holding Power
12VDC	9VDC Max	1.2VDC Min	3.8A Max	0.5A Approx	6W Max
24VDC	18VDC Max	2.4VDC Min	2A Max	0.25A Approx	6W Max

备注：1、线圈参数值是环境温度为20℃下的理论值，因线圈电阻的影响以上参数约±10%的变动范围；2、线圈可靠的工作电压范围为85%~110%Us额定电压；3、如需其他额定电压，可特殊订货。
Remarks: 1. The coil parameter values are theoretical values at an ambient temperature of 20 ℃, with a variation range of approximately ± 10% due to the influence of coil resistance; 2. The reliable working voltage range of the coil is 85%~110% of the rated voltage; 3. If other rated voltages are required, special orders can be made.

触点参数 Main Contact

触点形式 Contact Arrangement	1 Form A (SPST-NO)
触点极性 Contact Polarized	无极性 Nonpolarized
接触电阻(初始) Contact Resistance (Initial)	1mΩ (Typical Value)
负载电压 Loda Voltage	12-1500VDC
额定电流 Current (continuous)	200A
机械寿命 Mechanical Life	2×10^5 cycles
电气寿命 Electrical Life	图1 Graph 1
过载电流 Overload Current	图2 Graph 2

备注：1、阻性负载类别(L/R<0.1ms)；2、接通和分断转换频率，ON : OFF=1秒 : 9秒；3、测试环境温度为23±5℃；4、电气寿命是产品带载分断的次数。
Remarks: 1. Resistive load category (L/R<0.1ms); 2. Switching frequency between on and off, ON: OFF=1 sec: 9 sec; 3. The testing environment temperature is 23 ± 5 ℃; 4. The electrical life is the number of times a product breaks under load.

性能参数 Performance Parameter

绝缘电阻 Insulation Resistance	1000MΩ@2500VDC (Initial) ≤50MΩ@1000VDC (End)
介质耐压 Dielectric Withstanding Voltage	AC3500V 1min ≤10mA
动作时间 Operate Time	30ms (Include bounce)
释放时间 Release Time	12ms (Include bounce)
弹跳时间 Bounce Time	5ms
冲击 Shock	20g peak,1/2 sine(Operating)
正弦振动 Sine Vibration	20g peak,80~2000Hz
湿度 Humidity	5%~85%RH
温度 Operating Temperature	-40℃~+85℃
重量 Weight	470g Approx

备注：1、线圈施加额定工作电压，无续流二极管；2、测试环境温度为20℃。
Remarks: 1. Apply rated working voltage to the coil without a freewheeling diode; 2. The testing environment temperature is 20 ℃.

电气寿命参考曲线-图1
Electrical Life Reference Curve-Graph1

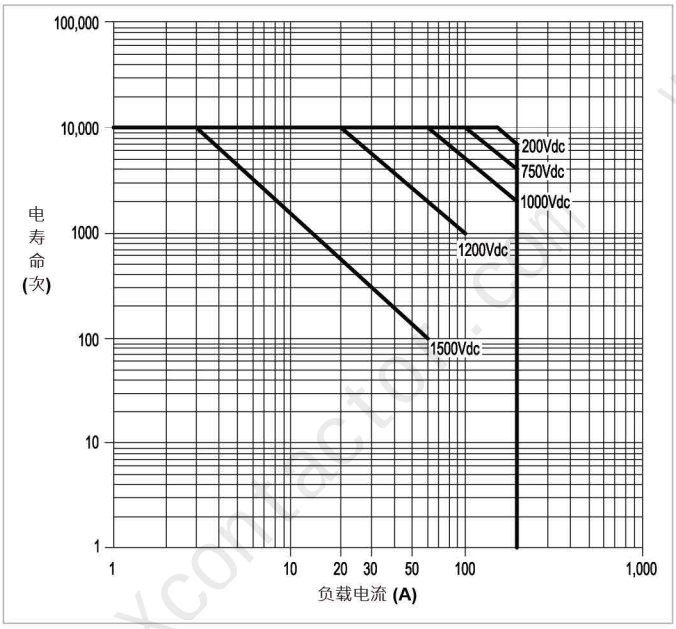

过载电流参考曲线-图2
Overload Current vs Time Reference Curve-Graph2

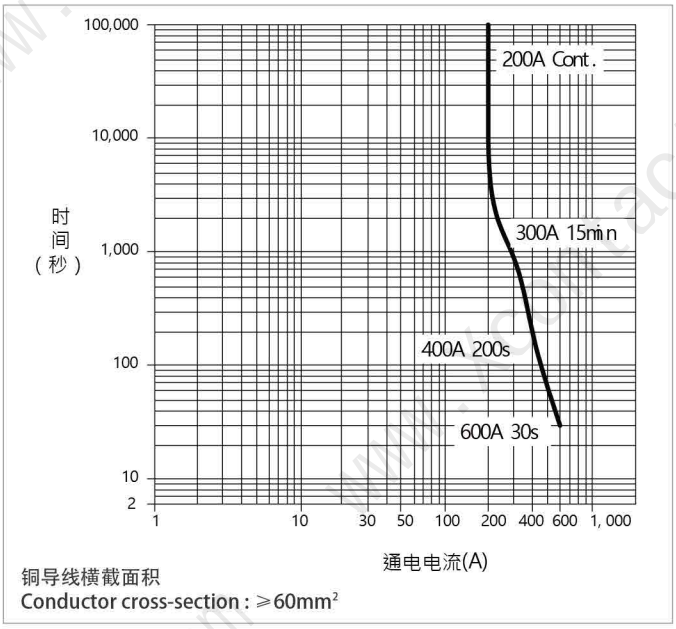

备注：1、以上数据曲线作为设计参考选型，不作为选型熔断器的依据；2、环境温度为23±5℃下。
Remarks: 1. The above data curve is used as a design reference for selection and not as a basis for selecting fuses; 2. At an ambient temperature of 23 ± 5 ℃.

尺寸图&接线原理图 Dimension & Wiring

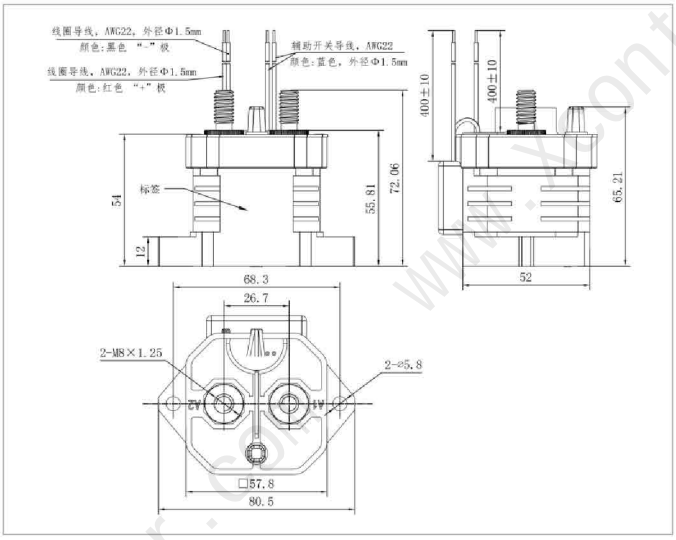

安装紧固件 Fastener	扭力范围 Torque Range	
	主触头接线 Main contacts wiring	底部固定 Product mount
M8 (配套提供 Provided)	9～12N・m	1.8～3.5N・m

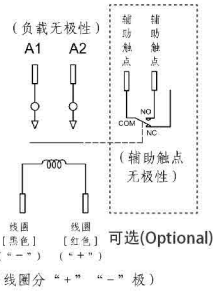

辅助开关 Aux Contact (可选 Optional):
AC-12:125VAC/3A；DC-12:30V/2A；
100mA/8V(最小电流 Current Min)

备注：
1、尺寸单位：mm，视角：⊕-⊳；
2、未注尺寸公差：
标称值＜10mm为±0.3，
标称值10～50mm为±0.6，
标称值＞50mm为±1.0；

Remarks:
1.Dimension unit: mm, viewing angle: ⊕-⊳；
2. Undeclared dimensional tolerance:
± 0.3 for nominal values<10mm,
The nominal value of 10-50mm is ± 0.6,±1.0 for nominal values greater than 50mm;

订货说明 Ordering Information

EVQ200 E 12 D A 5***

额定电流 Rated Current:
"200"＝200A

触点形式 Main contacts feature:
"E"＝主触头为一组常开，触头不分极性；1 form A(ON), non-polarized;
"G"＝主触头为一组常开，触头不分极性，带一组常开辅助触点；
1 form A(ON) add AUX contacts(ON), non-polarized;

线圈电压 Coil Voltage:
"12"＝12VDC
"24"＝24VDC

线圈引出方式 Coil lead out:
"D"＝导线式，不带连接器；Wire Without Connectors
"E"＝导线式，带连接器；Wire With Connectors
（制造商推荐Manufacturer's recommendation）

安装方式 Mounting:
"A"＝立式安装
Bottom mount

产品代码
Product code

EVQ250 Series-3

250A 直流接触器 DC Contactor

特性 Features

◎ 产品符合欧盟RoHS指令。
The product complies with the EU RoHS directive.

◎ 密封且安全，对安装位置不敏感。
Hermetically sealed and intrinsically safe. Not mounting position sensitive.

◎ 在恶劣环境下，产品触点不会被氧化或污染。
Operates in harsh environments without oxidation or contamination of contacts.

◎ 高压触点间填充有惰性气体。
High voltage isolation between open contacts, inert gas filled contact chamber.

◎ 产品设计与管控符合IATF-16949。
Product design and quality control in accordance to IATF-16949.

◎ 典型应用于车载电池、电机控制器、充电桩、光伏、储能。
Typical applications apply to Battery electric vehicles ,DC motor controller protection,DC charging pile, Photovoltaic controls,Energy Storage systems.

线圈参数 Coil Data

线圈电压 Coil Voltage	动作电压 Pickup Voltage	释放电压 Dropout Voltage	线圈电阻 Coil Resistance	平均保持电流 Avg. Holding Current	保持功耗 Holding Power
12VDC	9VDC Max	1.2VDC Min	25Ω	480mA	5.8W
24VDC	18VDC Max	2.4VDC Min	120Ω	200mA	4.8W
48VDC	36VDC Max	4.8VDC Min	410Ω	117mA	5.6W

备注：1、线圈参数值是环境温度为20℃下的理论值，因线圈电阻的影响以上参数约±10%的变动范围；2、线圈可靠的工作电压范围为85%~110%Us额定电压；3、如需其他额定电压，可特殊订货。
Remarks: 1. The coil parameter values are theoretical values at an ambient temperature of 20 ℃, with a variation range of approximately ± 10% due to the influence of coil resistance; 2. The reliable working voltage range of the coil is 85%~110% of the rated voltage; 3. If other rated voltages are required, special orders can be made.

触点参数 Main Contact

触点形式 Contact Arrangement	1 Form A (SPST-NO)
触点极性 Contact Polarized	无极性 Nonpolarized
接触电阻(初始) Contact Resistance (Initial)	1mΩ (Typical Value)
负载电压 Loda Voltage	12-1000VDC
额定电流 Current (continuous)	250A
机械寿命 Mechanical Life	2×10^5 cycles
电气寿命 Electrical Life	图1 Graph 1
过载电流 Overload Current	图2 Graph 2

备注：1、阻性负载类别(L/R<0.1ms)；2、接通和分断转换频率，ON : OFF=1秒 : 9秒；3、测试环境温度为23±5℃；4、电气寿命是产品带载分断的次数。
Remarks: 1. Resistive load category (L/R<0.1ms); 2. Switching frequency between on and off, ON: OFF=1 sec: 9 sec; 3. The testing environment temperature is 23 ± 5 ℃; 4. The electrical life is the number of times a product breaks under load.

性能参数 Performance Parameter

绝缘电阻 Insulation Resistance	1000MΩ@1000VDC (Initial) ≤50MΩ@1000VDC (End)
介质耐压 Dielectric Withstanding Voltage	AC2500V 1min ≤10mA
动作时间 Operate Time	30ms (Include bounce)
释放时间 Release Time	12ms (Include bounce)
弹跳时间 Bounce Time	5ms
冲击 Shock	20g peak,1/2 sine(Operating)
正弦振动 Sine Vibration	20g peak,80~2000Hz
湿度 Humidity	5%~85%RH
温度 Operating Temperature	-40℃~+85℃
重量 Weight	355g Approx

备注：1、线圈施加额定工作电压，无续流二极管；2、测试环境温度为20℃。
Remarks: 1. Apply rated working voltage to the coil without a freewheeling diode; 2. The testing environment temperature is 20 ℃.

电气寿命参考曲线-图1
Electrical Life Reference Curve-Graph1

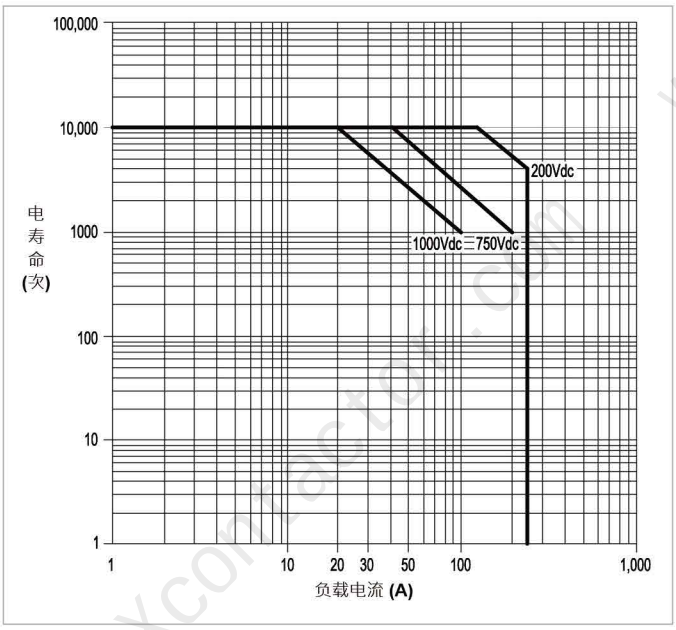

过载电流参考曲线-图2
Overload Current vs Time Reference Curve-Graph2

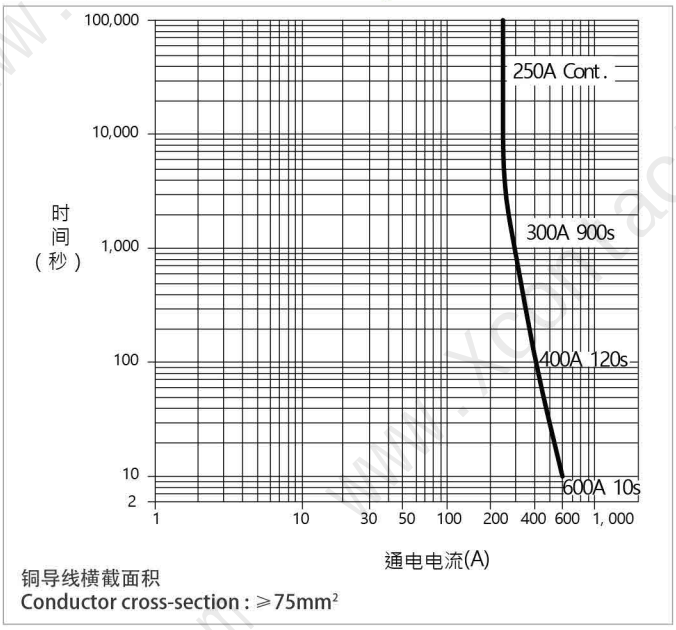

备注：1、以上数据曲线作为设计参考选型，不作为选型熔断器的依据；2、环境温度为23±5℃下。
Remarks: 1. The above data curve is used as a design reference for selection and not as a basis for selecting fuses; 2. At an ambient temperature of 23 ± 5 ℃.

尺寸图&接线原理图 Dimension & Wiring

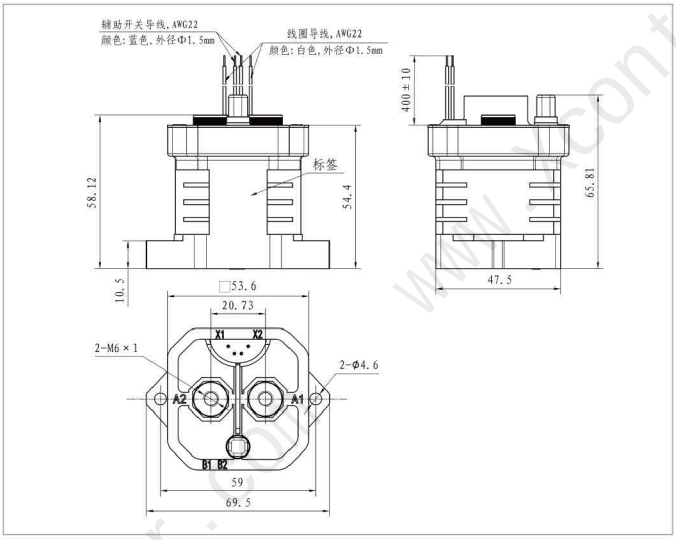

安装紧固件 Fastener	扭力范围 Torque Range	
	主触头接线 Main contacts wiring	底部固定 Product mount
M6×12 (配套提供 Provided)	4.5～6.5N・m	1.8～2.5N・m

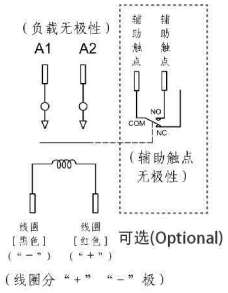

辅助开关 Aux Contact (可选 Optional):
AC-12:125VAC/3A；DC-12:30V/2A；
100mA/8V(最小电流 Current Min)

备注:
1、尺寸单位：mm，视角：⊕-▷；
2、未注尺寸公差：
标称值<10mm为±0.3,
标称值10～50mm为±0.6,
标称值>50mm为±1.0;

Remarks:
1.Dimension unit: mm, viewing angle: ⊕-▷；
2. Undeclared dimensional tolerance:
± 0.3 for nominal values<10mm,
The nominal value of 10-50mm is ± 0.6,±1.0 for nominal values greater than 50mm;

订货说明 Ordering Information

EVQ250 E 12 D A 3***

额定电流 Rated Current:
"250"＝250A

触点形式 Main contacts feature:
"E"＝主触头为一组常开，触头不分极性；1 form A(ON), non-polarized;
"G"＝主触头为一组常开，触头不分极性，带一组常开辅助触点；
1 form A(ON) add AUX contacts(ON), non-polarized;

线圈电压 Coil Voltage:
"12"＝12VDC
"24"＝24VDC
"48"＝48VDC

线圈引出方式 Coil lead out:
"D"＝导线式，不带连接器；Wire Without Connectors
"E"＝导线式，带连接器;Wire With Connectors
（制造商推荐Manufacturer's recommendation）

安装方式 Mounting:
"A"＝立式安装
Bottom mount

产品代码
Product code

EVQ250 Series-6

250A 直流接触器 DC Contactor

特性 Features

◎ 产品符合欧盟RoHS指令。
The product complies with the EU RoHS directive.

◎ 密封且安全，对安装位置不敏感。
Hermetically sealed and intrinsically safe. Not mounting position sensitive.

◎ 在恶劣环境下，产品触点不会被氧化或污染。
Operates in harsh environments without oxidation or contamination of contacts.

◎ 高压触点间填充有惰性气体。
High voltage isolation between open contacts, inert gas filled contact chamber.

◎ 产品设计与管控符合IATF-16949。
Product design and quality control in accordance to IATF-16949.

◎ 典型应用于车载电池、电机控制器、充电桩、光伏、储能。
Typical applications apply to Battery electric vehicles ,DC motor controller protection,DC charging pile, Photovoltaic controls,Energy Storage systems.

线圈参数 Coil Data

线圈电压 Coil Voltage	动作电压 Pickup Voltage	释放电压 Dropout Voltage	瞬间启动电流 Inrush Current	平均保持电流 Avg. Holding Current	保持功耗 Holding Power
12VDC	9VDC Max	1.2VDC Min	/	0.8A Approx	9.6W Max
24VDC	18VDC Max	2.4VDC Min	/	0.3A Approx	7W Max
48VDC	36VDC Max	4.8VDC Min	/	0.14A Approx	6.6W Max

备注：1、线圈参数值是环境温度为20℃下的理论值，因线圈电阻的影响以上参数约±10%的变动范围；2、线圈可靠的工作电压范围为85%~110%Us额定电压；3、如需其他额定电压，可特殊订货。
Remarks: 1. The coil parameter values are theoretical values at an ambient temperature of 20 ℃, with a variation range of approximately ± 10% due to the influence of coil resistance; 2. The reliable working voltage range of the coil is 85%~110% of the rated voltage; 3. If other rated voltages are required, special orders can be made.

触点参数 Main Contact

触点形式 Contact Arrangement	1 Form A (SPST-NO)
触点极性 Contact Polarized	无极性 Nonpolarized
接触电阻(初始) Contact Resistance (Initial)	1mΩ (Typical Value)
负载电压 Loda Voltage	12-1000VDC
额定电流 Current (continuous)	250A
机械寿命 Mechanical Life	2×10^5 cycles
电气寿命 Electrical Life	图1 Graph 1
过载电流 Overload Current	图2 Graph 2

备注：1、阻性负载类别(L/R<0.1ms)；2、接通和分断转换频率，ON：OFF=1秒：9秒；3、测试环境温度为23±5℃；4、电气寿命是产品带载分断的次数。
Remarks: 1. Resistive load category (L/R<0.1ms); 2. Switching frequency between on and off, ON: OFF=1 sec: 9 sec; 3. The testing environment temperature is 23 ± 5 ℃; 4. The electrical life is the number of times a product breaks under load.

性能参数 Performance Parameter

绝缘电阻 Insulation Resistance	1000MΩ@1000VDC (Initial) ≤50MΩ@1000VDC (End)
介质耐压 Dielectric Withstanding Voltage	AC2500V 1min ≤10mA
动作时间 Operate Time	40ms (Include bounce)
释放时间 Release Time	12ms (Include bounce)
弹跳时间 Bounce Time	5ms
冲击 Shock	20g peak,1/2 sine(Operating)
正弦振动 Sine Vibration	20g peak,80~2000Hz
湿度 Humidity	5%~85%RH
温度 Operating Temperature	-40℃~+85℃
重量 Weight	575g Approx

备注：1、线圈施加额定工作电压，无续流二极管；2、测试环境温度为20℃。
Remarks: 1. Apply rated working voltage to the coil without a freewheeling diode; 2. The testing environment temperature is 20 ℃.

电气寿命参考曲线-图1
Electrical Life Reference Curve-Graph1

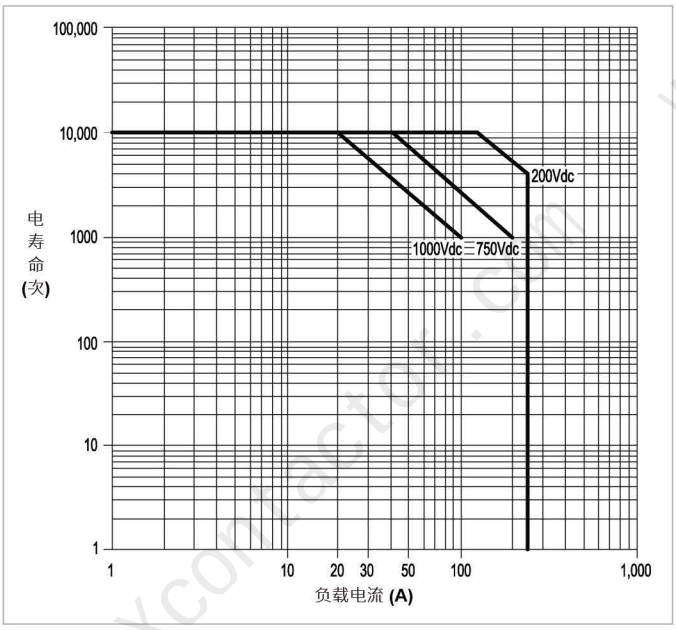

过载电流参考曲线-图2
Overload Current vs Time Reference Curve-Graph2

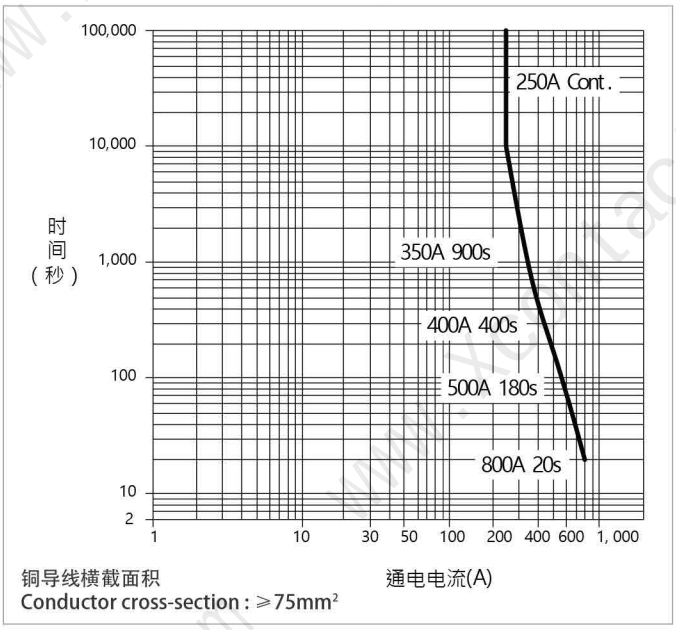

备注：1、以上数据曲线作为设计参考选型，不作为选型熔断器的依据；2、环境温度为23±5℃下。
Remarks: 1. The above data curve is used as a design reference for selection and not as a basis for selecting fuses; 2. At an ambient temperature of 23 ± 5 ℃.

尺寸图&接线原理图 Dimension & Wiring

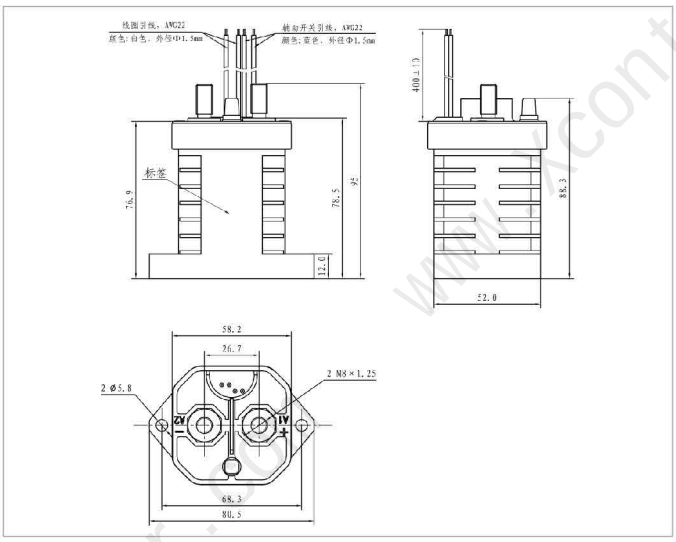

安装紧固件 Fastener	扭力范围 Torque Range	
	主触头接线 Main contacts wiring	底部固定 Product mount
M8 (配套提供 Provided)	9～12N・m	1.8～3.5N・m

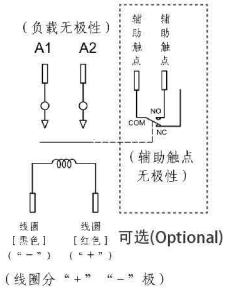

辅助开关 Aux Contact (可选 Optional):
AC-12:125VAC/3A；DC-12:30V/2A；
100mA/8V(最小电流 Current Min)

备注：
1、尺寸单位：mm，视角：⊕-⊳；
2、未注尺寸公差：
标称值＜10mm为±0.3，
标称值10～50mm为±0.6，
标称值＞50mm为±1.0；

Remarks:
1.Dimension unit: mm, viewing angle: ⊕-⊳；
2. Undeclared dimensional tolerance:
± 0.3 for nominal values<10mm,
The nominal value of 10-50mm is ± 0.6,±1.0 for nominal values greater than 50mm;

订货说明 Ordering Information

EVQ250 E 12 D A 6***

额定电流 Rated Current:
“250”＝250A

触点形式 Main contacts feature:
“E”＝主触头为一组常开，触头不分极性；1 form A(ON), non-polarized;
“G”＝主触头为一组常开，触头不分极性，带一组常开辅助触点；
1 form A(ON) add AUX contacts(ON), non-polarized;

线圈电压 Coil Voltage:
“12”＝12VDC
“24”＝24VDC
“48”＝48VDC

线圈引出方式 Coil lead out:
“D”＝导线式，不带连接器；Wire Without Connectors
“E”＝导线式，带连接器；Wire With Connectors
（制造商推荐Manufacturer's recommendation）

安装方式 Mounting:
“A”＝立式安装
Bottom mount

产品代码
Product code

特性 Features

◎ 产品符合欧盟RoHS指令。
The product complies with the EU RoHS directive.

◎ 密封且安全，对安装位置不敏感。
Hermetically sealed and intrinsically safe. Not mounting position sensitive.

◎ 在恶劣环境下，产品触点不会被氧化或污染。
Operates in harsh environments without oxidation or contamination of contacts.

◎ 高压触点间填充有惰性气体。
High voltage isolation between open contacts, inert gas filled contact chamber.

◎ 产品设计与管控符合IATF-16949。
Product design and quality control in accordance to IATF-16949.

◎ 典型应用于车载电池、电机控制器、充电桩、光伏、储能。
Typical applications apply to Battery electric vehicles ,DC motor controller protection,DC charging pile, Photovoltaic controls,Energy Storage systems.

线圈参数 Coil Data

线圈电压 Coil Voltage	动作电压 Pickup Voltage	释放电压 Dropout Voltage	瞬间启动电流 Inrush Current	平均保持电流 Avg. Holding Current	保持功耗 Holding Power
12VDC	9VDC Max	1.2VDC Min	3.8A Max	0.5A Approx	6W Max
24VDC	18VDC Max	2.4VDC Min	2A Max	0.25A Approx	6W Max

备注：1、线圈参数值是环境温度为20℃下的理论值，因线圈电阻的影响以上参数约±10%的变动范围；2、线圈可靠的工作电压范围为85%~110%Us额定电压；3、如需其他额定电压，可特殊订货。
Remarks: 1. The coil parameter values are theoretical values at an ambient temperature of 20 ℃, with a variation range of approximately ± 10% due to the influence of coil resistance; 2. The reliable working voltage range of the coil is 85%~110% of the rated voltage; 3. If other rated voltages are required, special orders can be made.

触点参数 Main Contact

触点形式 Contact Arrangement	1 Form A (SPST-NO)
触点极性 Contact Polarized	无极性 Nonpolarized
接触电阻(初始) Contact Resistance (Initial)	1mΩ (Typical Value)
负载电压 Loda Voltage	12-1500VDC
额定电流 Current (continuous)	250A
机械寿命 Mechanical Life	2×10^5 cycles
电气寿命 Electrical Life	图1 Graph 1
过载电流 Overload Current	图2 Graph 2

备注：1、阻性负载类别(L/R<0.1ms)；2、接通和分断转换频率，ON : OFF=1秒 : 9秒；3、测试环境温度为23±5℃；4、电气寿命是产品带载分断的次数。
Remarks: 1. Resistive load category (L/R<0.1ms); 2. Switching frequency between on and off, ON: OFF=1 sec: 9 sec; 3. The testing environment temperature is 23 ± 5 ℃; 4. The electrical life is the number of times a product breaks under load.

性能参数 Performance Parameter

绝缘电阻 Insulation Resistance	1000MΩ@2500VDC (Initial) ≤50MΩ@1000VDC (End)
介质耐压 Dielectric Withstanding Voltage	AC3500V 1min ≤10mA
动作时间 Operate Time	30ms (Include bounce)
释放时间 Release Time	12ms (Include bounce)
弹跳时间 Bounce Time	5ms
冲击 Shock	20g peak,1/2 sine(Operating)
正弦振动 Sine Vibration	20g peak,80~2000Hz
湿度 Humidity	5%~85%RH
温度 Operating Temperature	-40℃~+85℃
重量 Weight	470g Approx

备注：1、线圈施加额定工作电压，无续流二极管；2、测试环境温度为20℃。
Remarks: 1. Apply rated working voltage to the coil without a freewheeling diode; 2. The testing environment temperature is 20 ℃.

电气寿命参考曲线-图1
Electrical Life Reference Curve-Graph1

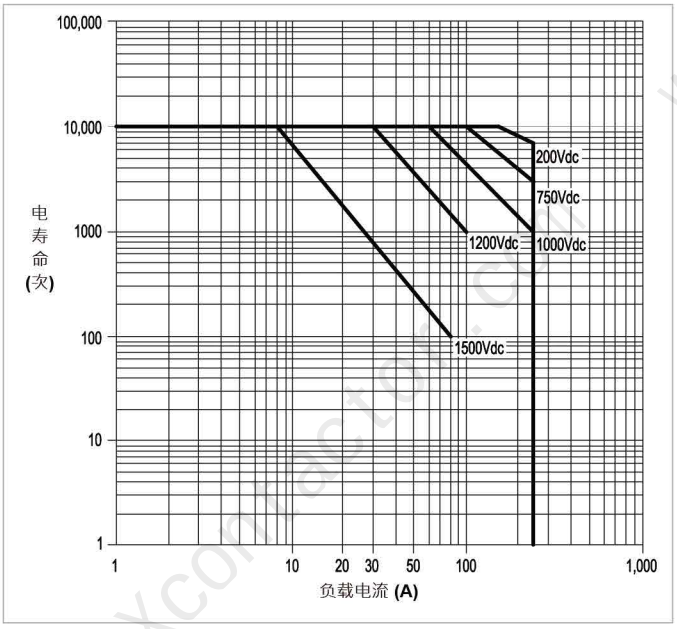

过载电流参考曲线-图2
Overload Current vs Time Reference Curve-Graph2

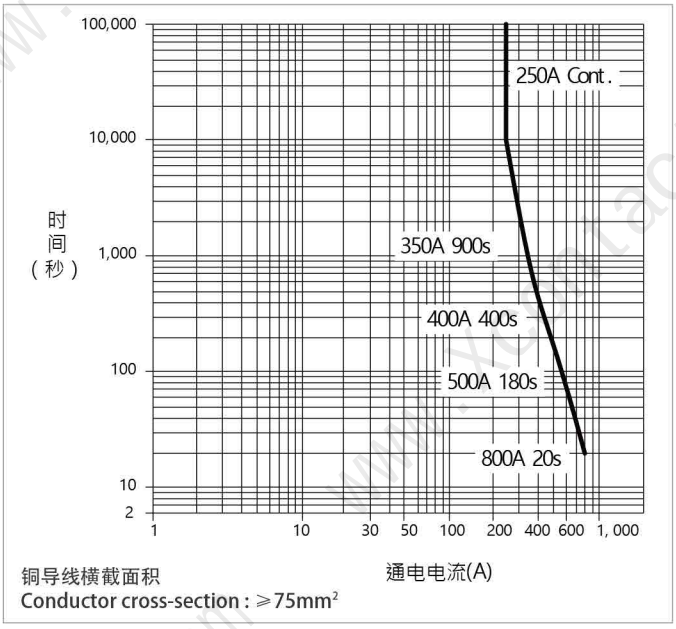

备注：1、以上数据曲线作为设计参考选型，不作为选型熔断器的依据；2、环境温度为23±5℃下。
Remarks: 1. The above data curve is used as a design reference for selection and not as a basis for selecting fuses; 2. At an ambient temperature of 23 ± 5 ℃.

尺寸图&接线原理图 Dimension & Wiring

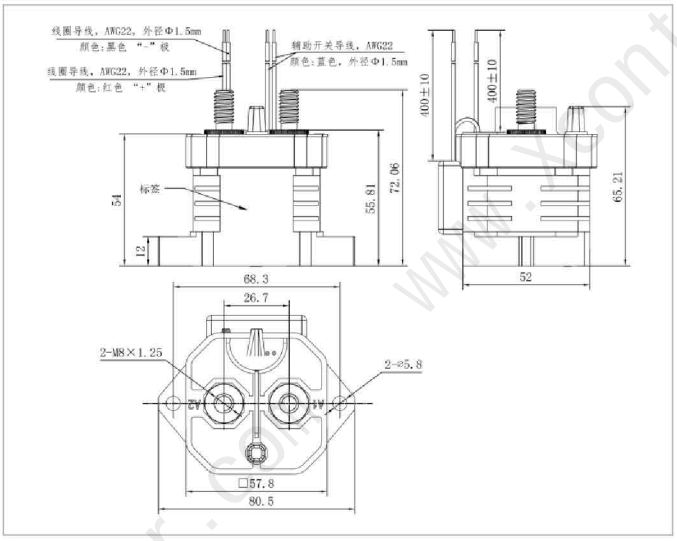

安装紧固件 Fastener	扭力范围 Torque Range	
	主触头接线 Main contacts wiring	底部固定 Product mount
M8 (配套提供 Provided)	9～12N・m	1.8～3.5N・m

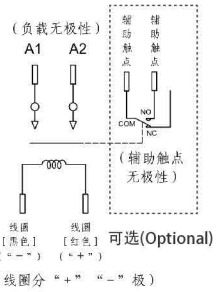

辅助开关 Aux Contact (可选 Optional):
AC-12:125VAC/3A；DC-12:30V/2A；
100mA/8V(最小电流 Current Min)

备注：
1、尺寸单位：mm，视角：⊕-⊳；
2、未注尺寸公差：
标称值<10mm为±0.3,
标称值10～50mm为±0.6,
标称值>50mm为±1.0;

Remarks:
1.Dimension unit: mm, viewing angle: ⊕-⊳；
2. Undeclared dimensional tolerance:
± 0.3 for nominal values<10mm,
The nominal value of 10-50mm is ± 0.6,±1.0 for nominal values greater than 50mm;

订货说明 Ordering Information

EVQ250 E 12 D A 5***

额定电流 Rated Current:
"250"＝250A

触点形式 Main contacts feature:
"E"＝主触头为一组常开，触头不分极性；1 form A(ON), non-polarized;
"G"＝主触头为一组常开，触头不分极性，带一组常开辅助触点；
1 form A(ON) add AUX contacts(ON), non-polarized;

线圈电压 Coil Voltage:
"12"＝12VDC
"24"＝24VDC

线圈引出方式 Coil lead out:
"D"＝导线式，不带连接器；Wire Without Connectors
"E"＝导线式，带连接器；Wire With Connectors
（制造商推荐Manufacturer's recommendation）

安装方式 Mounting:
"A"＝立式安装
Bottom mount

产品代码
Product code

EVQ300 Series-6

300A 直流接触器 DC Contactor

特性 Features

◎ 产品符合欧盟RoHS指令。
The product complies with the EU RoHS directive.

◎ 密封且安全，对安装位置不敏感。
Hermetically sealed and intrinsically safe. Not mounting position sensitive.

◎ 在恶劣环境下，产品触点不会被氧化或污染。
Operates in harsh environments without oxidation or contamination of contacts.

◎ 高压触点间填充有惰性气体。
High voltage isolation between open contacts, inert gas filled contact chamber.

◎ 产品设计与管控符合IATF-16949。
Product design and quality control in accordance to IATF-16949.

◎ 典型应用于车载电池、电机控制器、充电桩、光伏、储能。
Typical applications apply to Battery electric vehicles ,DC motor controller protection,DC charging pile, Photovoltaic controls,Energy Storage systems.

线圈参数 Coil Data

线圈电压 Coil Voltage	动作电压 Pickup Voltage	释放电压 Dropout Voltage	瞬间启动电流 Inrush Current	平均保持电流 Avg. Holding Current	保持功耗 Holding Power
12VDC	9VDC Max	1.2VDC Min	/	0.8A Approx	9.6W Max
24VDC	18VDC Max	2.4VDC Min	/	0.3A Approx	7W Max
48VDC	36VDC Max	4.8VDC Min	/	0.14A Approx	6.6W Max

备注：1、线圈参数值是环境温度为20℃下的理论值，因线圈电阻的影响以上参数约±10%的变动范围；2、线圈可靠的工作电压范围为85%~110%Us额定电压；3、如需其他额定电压，可特殊订货。
Remarks: 1. The coil parameter values are theoretical values at an ambient temperature of 20 ℃, with a variation range of approximately ± 10% due to the influence of coil resistance; 2. The reliable working voltage range of the coil is 85%~110% of the rated voltage; 3. If other rated voltages are required, special orders can be made.

触点参数 Main Contact

触点形式 Contact Arrangement	1 Form A (SPST-NO)
触点极性 Contact Polarized	无极性 Nonpolarized
接触电阻(初始) Contact Resistance (Initial)	1mΩ (Typical Value)
负载电压 Loda Voltage	12-450VDC
额定电流 Current (continuous)	300A
机械寿命 Mechanical Life	2×10^5 cycles
电气寿命 Electrical Life	图1 Graph 1
过载电流 Overload Current	图2 Graph 2

备注：1、阻性负载类别(L/R<0.1ms)；2、接通和分断转换频率，ON : OFF=1秒 : 9秒；3、测试环境温度为23±5℃；4、电气寿命是产品带载分断的次数。
Remarks: 1. Resistive load category (L/R<0.1ms); 2. Switching frequency between on and off, ON: OFF=1 sec: 9 sec; 3. The testing environment temperature is 23 ± 5 ℃; 4. The electrical life is the number of times a product breaks under load.

性能参数 Performance Parameter

绝缘电阻 Insulation Resistance	1000MΩ@1000VDC (Initial) ≤50MΩ@1000VDC (End)
介质耐压 Dielectric Withstanding Voltage	AC2500V 1min ≤10mA
动作时间 Operate Time	40ms (Include bounce)
释放时间 Release Time	12ms (Include bounce)
弹跳时间 Bounce Time	5ms
冲击 Shock	20g peak,1/2 sine(Operating)
正弦振动 Sine Vibration	20g peak,80~2000Hz
湿度 Humidity	5%~85%RH
温度 Operating Temperature	-40℃~+85℃
重量 Weight	575g Approx

备注：1、线圈施加额定工作电压，无续流二极管；2、测试环境温度为20℃。
Remarks: 1. Apply rated working voltage to the coil without a freewheeling diode; 2. The testing environment temperature is 20 ℃.

电气寿命参考曲线-图1
Electrical Life Reference Curve-Graph1

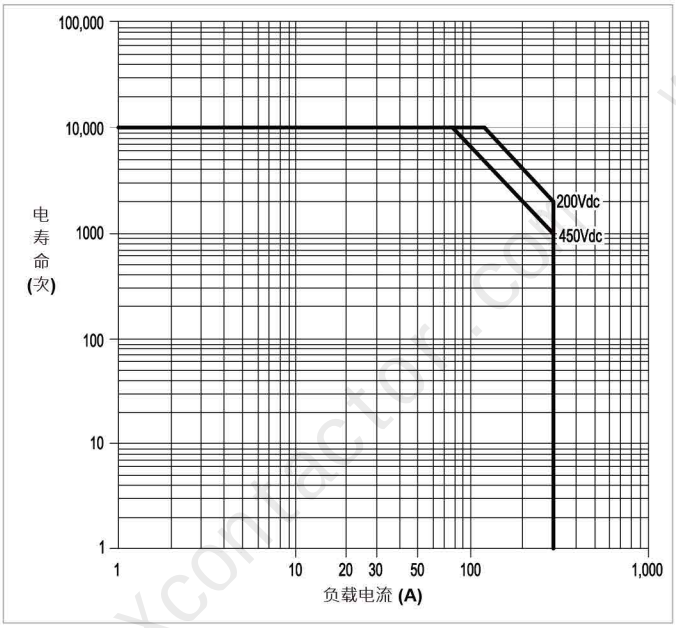

过载电流参考曲线-图2
Overload Current vs Time Reference Curve-Graph2

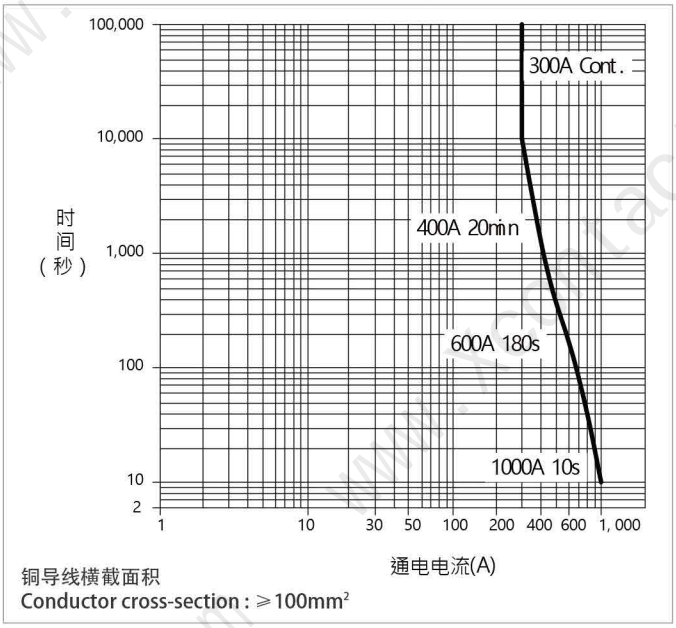

备注：1、以上数据曲线作为设计参考选型，不作为选型熔断器的依据；2、环境温度为23±5℃下。
Remarks: 1. The above data curve is used as a design reference for selection and not as a basis for selecting fuses; 2. At an ambient temperature of 23 ± 5 ℃.

尺寸图&接线原理图 Dimension & Wiring

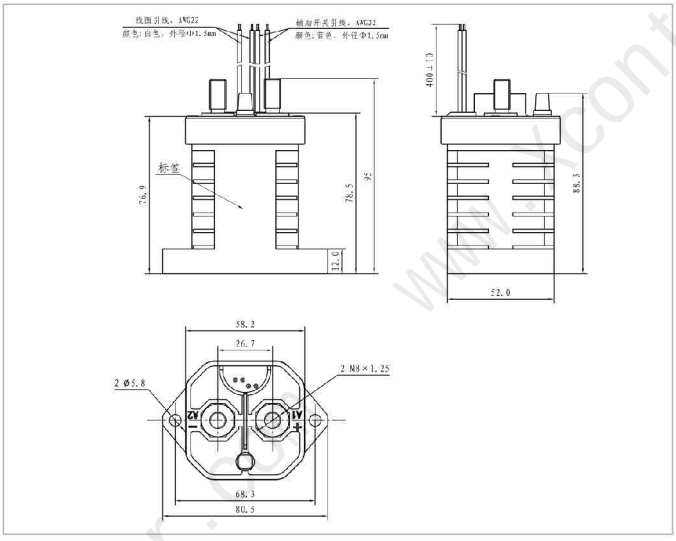

安装紧固件 Fastener	扭力范围 Torque Range	
	主触头接线 Main contacts wiring	底部固定 Product mount
M8 (配套提供 Provided)	9～12N・m	1.8～3.5N・m

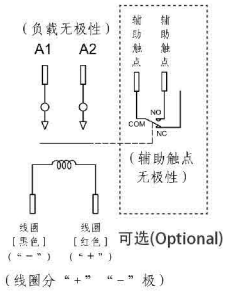

辅助开关 Aux Contact（可选 Optional）:
AC-12:125VAC/3A；DC-12:30V/2A；
100mA/8V(最小电流 Current Min)

备注：
1、尺寸单位：mm，视角：⊕-⊳；
2、未注尺寸公差：
标称值<10mm为±0.3，
标称值10～50mm为±0.6，
标称值>50mm为±1.0；

Remarks:
1.Dimension unit: mm, viewing angle: ⊕-⊳；
2. Undeclared dimensional tolerance:
± 0.3 for nominal values<10mm,
The nominal value of 10-50mm is ± 0.6,±1.0 for nominal values greater than 50mm;

订货说明 Ordering Information

EVQ300 E 12 D A 6***

额定电流 Rated Current：
"300"＝300A

触点形式 Main contacts feature：
"E"＝主触头为一组常开，触头不分极性；1 form A(ON), non-polarized;
"G"＝主触头为一组常开，触头不分极性，带一组常开辅助触点；
1 form A(ON) add AUX contacts(ON), non-polarized;

线圈电压 Coil Voltage：
"12"＝12VDC
"24"＝24VDC
"48"＝48VDC

线圈引出方式 Coil lead out：
"D"＝导线式，不带连接器；Wire Without Connectors
"E"＝导线式，带连接器；Wire With Connectors
（制造商推荐Manufacturer's recommendation）

安装方式 Mounting：
"A"＝立式安装
Bottom mount

产品代码
Product code

EVQ300 Series-5

300A 直流接触器 DC Contactor

特性 Features

◎ 产品符合欧盟RoHS指令。
The product complies with the EU RoHS directive.

◎ 密封且安全，对安装位置不敏感。
Hermetically sealed and intrinsically safe. Not mounting position sensitive.

◎ 在恶劣环境下，产品触点不会被氧化或污染。
Operates in harsh environments without oxidation or contamination of contacts.

◎ 高压触点间填充有惰性气体。
High voltage isolation between open contacts, inert gas filled contact chamber.

◎ 产品设计与管控符合IATF-16949。
Product design and quality control in accordance to IATF-16949.

◎ 典型应用于车载电池、电机控制器、充电桩、光伏、储能。
Typical applications apply to Battery electric vehicles ,DC motor controller protection,DC charging pile, Photovoltaic controls,Energy Storage systems.

线圈参数 Coil Data

线圈电压 Coil Voltage	动作电压 Pickup Voltage	释放电压 Dropout Voltage	瞬间启动电流 Inrush Current	平均保持电流 Avg. Holding Current	保持功耗 Holding Power
12VDC	9VDC Max	1.2VDC Min	3.8A Max	0.5A Approx	6W Max
24VDC	18VDC Max	2.4VDC Min	2A Max	0.25A Approx	6W Max

备注：1、线圈参数值是环境温度为20℃下的理论值，因线圈电阻的影响以上参数约±10%的变动范围；2、线圈可靠的工作电压范围为85%~110%Us额定电压；3、如需其他额定电压，可特殊订货。
Remarks: 1. The coil parameter values are theoretical values at an ambient temperature of 20 ℃, with a variation range of approximately ± 10% due to the influence of coil resistance; 2. The reliable working voltage range of the coil is 85%~110% of the rated voltage; 3. If other rated voltages are required, special orders can be made.

触点参数 Main Contact

触点形式 Contact Arrangement	1 Form A (SPST-NO)
触点极性 Contact Polarized	无极性 Nonpolarized
接触电阻(初始) Contact Resistance (Initial)	1mΩ (Typical Value)
负载电压 Loda Voltage	12-1500VDC
额定电流 Current (continuous)	300A
机械寿命 Mechanical Life	2×10^5 cycles
电气寿命 Electrical Life	图1 Graph 1
过载电流 Overload Current	图2 Graph 2

备注：1、阻性负载类别(L/R<0.1ms)；2、接通和分断转换频率，ON : OFF=1秒 : 9秒；3、测试环境温度为23±5℃；4、电气寿命是产品带载分断的次数。
Remarks: 1. Resistive load category (L/R<0.1ms); 2. Switching frequency between on and off, ON: OFF=1 sec: 9 sec; 3. The testing environment temperature is 23 ± 5 ℃; 4. The electrical life is the number of times a product breaks under load.

性能参数 Performance Parameter

绝缘电阻 Insulation Resistance	1000MΩ@2500VDC (Initial) ≤50MΩ@1000VDC (End)
介质耐压 Dielectric Withstanding Voltage	AC3500V 1min ≤10mA
动作时间 Operate Time	30ms (Include bounce)
释放时间 Release Time	12ms (Include bounce)
弹跳时间 Bounce Time	5ms
冲击 Shock	20g peak,1/2 sine(Operating)
正弦振动 Sine Vibration	20g peak,80~2000Hz
湿度 Humidity	5%~85%RH
温度 Operating Temperature	-40℃~+85℃
重量 Weight	470g Approx

备注：1、线圈施加额定工作电压，无续流二极管；2、测试环境温度为20℃。
Remarks: 1. Apply rated working voltage to the coil without a freewheeling diode; 2. The testing environment temperature is 20 ℃.

电气寿命参考曲线-图1
Electrical Life Reference Curve-Graph1

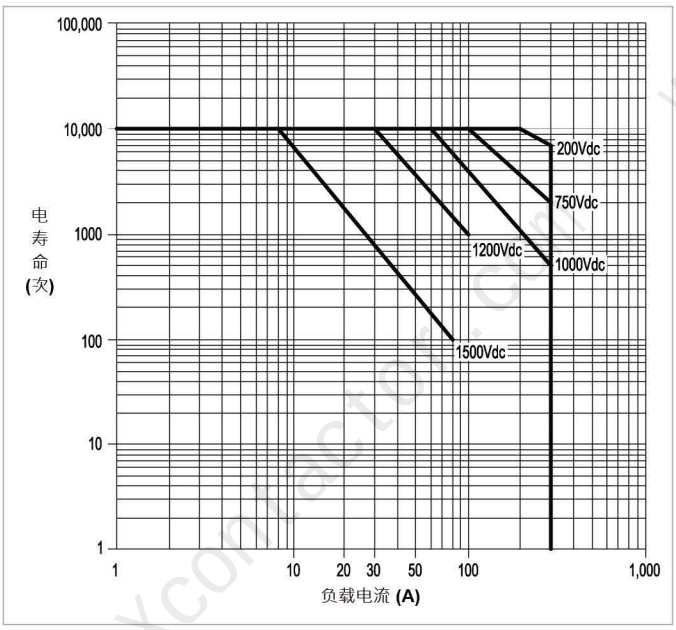

过载电流参考曲线-图2
Overload Current vs Time Reference Curve-Graph2

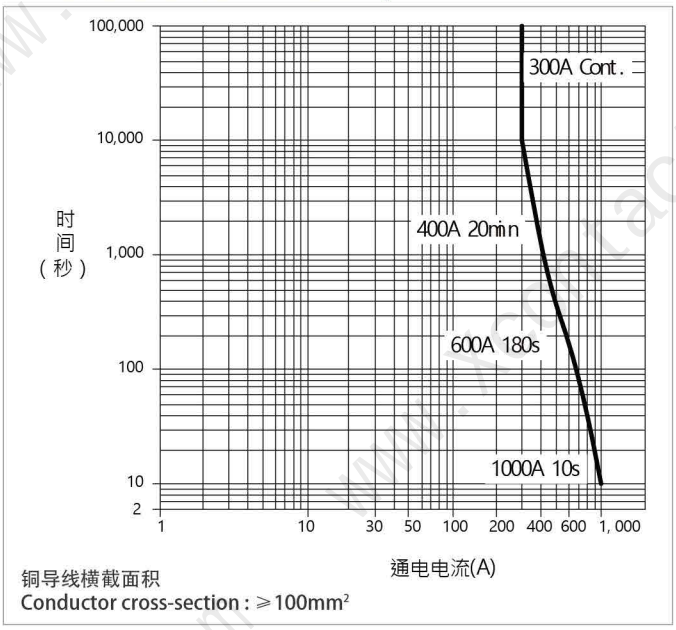

备注：1、以上数据曲线作为设计参考选型，不作为选型熔断器的依据；2、环境温度为23±5℃下。
Remarks: 1. The above data curve is used as a design reference for selection and not as a basis for selecting fuses; 2. At an ambient temperature of 23 ± 5 ℃.

尺寸图&接线原理图 Dimension & Wiring

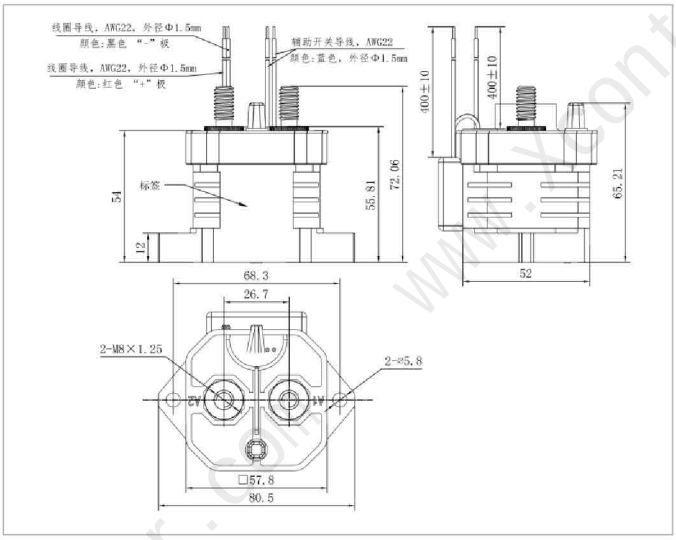

安装紧固件 Fastener	扭力范围 Torque Range	
	主触头接线 Main contacts wiring	底部固定 Product mount
M8 (配套提供 Provided)	9～12N・m	1.8～3.5N・m

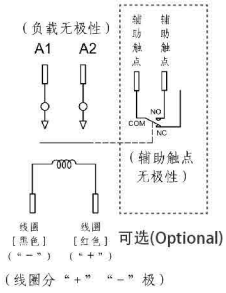

辅助开关 Aux Contact (可选 Optional):
AC-12:125VAC/3A；DC-12:30V/2A；
100mA/8V(最小电流 Current Min)

备注：
1、尺寸单位：mm，视角：⊕-⊳；
2、未注尺寸公差：
标称值<10mm为±0.3,
标称值10～50mm为±0.6,
标称值>50mm为±1.0;

Remarks:
1.Dimension unit: mm, viewing angle: ⊕-⊳；
2. Undeclared dimensional tolerance:
± 0.3 for nominal values<10mm,
The nominal value of 10-50mm is ± 0.6,±1.0 for nominal values greater than 50mm;

订货说明 Ordering Information

EVQ300 E 12 D A 5***

额定电流 Rated Current:
"300"＝300A

触点形式 Main contacts feature:
"E"＝主触头为一组常开，触头不分极性；1 form A(ON), non-polarized;
"G"＝主触头为一组常开，触头不分极性，带一组常开辅助触点；
1 form A(ON) add AUX contacts(ON), non-polarized;

线圈电压 Coil Voltage:
"12"＝12VDC
"24"＝24VDC

线圈引出方式 Coil lead out:
"D"＝导线式，不带连接器；Wire Without Connectors
"E"＝导线式，带连接器；Wire With Connectors
（制造商推荐Manufacturer's recommendation）

安装方式 Mounting:
"A"＝立式安装
Bottom mount

产品代码
Product code

EVQ300 Series-5G

300A 直流接触器 DC Contactor

特性 Features

◎ 产品符合欧盟RoHS指令。
The product complies with the EU RoHS directive.

◎ 密封且安全，对安装位置不敏感。
Hermetically sealed and intrinsically safe. Not mounting position sensitive.

◎ 在恶劣环境下，产品触点不会被氧化或污染。
Operates in harsh environments without oxidation or contamination of contacts.

◎ 高压触点间填充有惰性气体。
High voltage isolation between open contacts, inert gas filled contact chamber.

◎ 产品设计与管控符合IATF-16949。
Product design and quality control in accordance to IATF-16949.

◎ 典型应用于车载电池、电机控制器、充电桩、光伏、储能。
Typical applications apply to Battery electric vehicles ,DC motor controller protection,DC charging pile, Photovoltaic controls,Energy Storage systems.

线圈参数 Coil Data

线圈电压 Coil Voltage	动作电压 Pickup Voltage	释放电压 Dropout Voltage	瞬间启动电流 Inrush Current	平均保持电流 Avg. Holding Current	保持功耗 Holding Power
12VDC	9VDC Max	1.2VDC Min	3.8A Max	0.5A Approx	6W Max
24VDC	18VDC Max	2.4VDC Min	2A Max	0.25A Approx	6W Max

备注：1、线圈参数值是环境温度为20℃下的理论值，因线圈电阻的影响以上参数约±10%的变动范围；2、线圈可靠的工作电压范围为85%~110%Us额定电压；3、如需其他额定电压，可特殊订货。
Remarks: 1. The coil parameter values are theoretical values at an ambient temperature of 20 ℃, with a variation range of approximately ± 10% due to the influence of coil resistance; 2. The reliable working voltage range of the coil is 85%~110% of the rated voltage; 3. If other rated voltages are required, special orders can be made.

触点参数 Main Contact

触点形式 Contact Arrangement	1 Form A (SPST-NO)
触点极性 Contact Polarized	无极性 Nonpolarized
接触电阻(初始) Contact Resistance (Initial)	1mΩ (Typical Value)
负载电压 Loda Voltage	12-450VDC
额定电流 Current (continuous)	300A
机械寿命 Mechanical Life	2×10^5 cycles
电气寿命 Electrical Life	图1 Graph 1
过载电流 Overload Current	图2 Graph 2

备注：1、阻性负载类别(L/R<0.1ms)；2、接通和分断转换频率，ON : OFF=1秒 : 9秒；3、测试环境温度为23±5℃；4、电气寿命是产品带载分断的次数。
Remarks: 1. Resistive load category (L/R<0.1ms); 2. Switching frequency between on and off, ON: OFF=1 sec: 9 sec; 3. The testing environment temperature is 23 ± 5 ℃; 4. The electrical life is the number of times a product breaks under load.

性能参数 Performance Parameter

绝缘电阻 Insulation Resistance	1000MΩ@1000VDC (Initial) ≤50MΩ@1000VDC (End)
介质耐压 Dielectric Withstanding Voltage	AC2500V 1min ≤10mA
动作时间 Operate Time	30ms (Include bounce)
释放时间 Release Time	12ms (Include bounce)
弹跳时间 Bounce Time	5ms
冲击 Shock	20g peak,1/2 sine(Operating)
正弦振动 Sine Vibration	20g peak,80~2000Hz
湿度 Humidity	5%~85%RH
温度 Operating Temperature	-40℃~+85℃
重量 Weight	480g Approx

备注：1、线圈施加额定工作电压，无续流二极管；2、测试环境温度为20℃。
Remarks: 1. Apply rated working voltage to the coil without a freewheeling diode; 2. The testing environment temperature is 20 ℃.

电气寿命参考曲线-图1
Electrical Life Reference Curve-Graph1

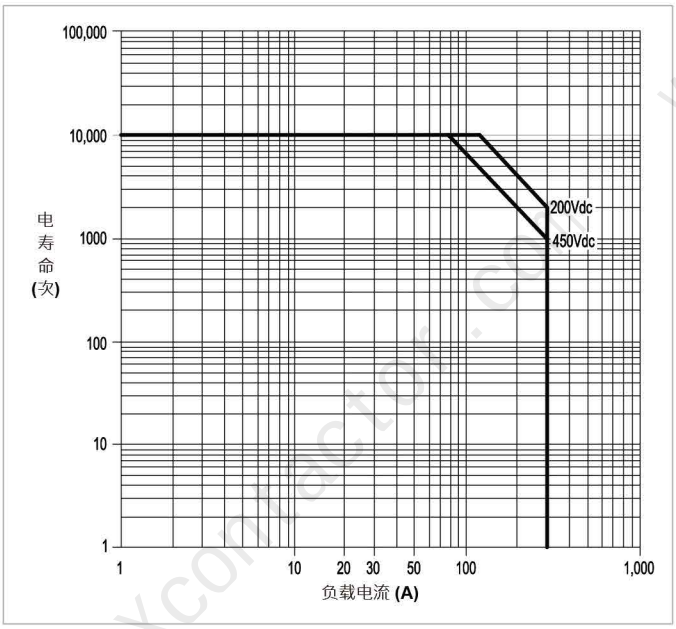

过载电流参考曲线-图2
Overload Current vs Time Reference Curve-Graph2

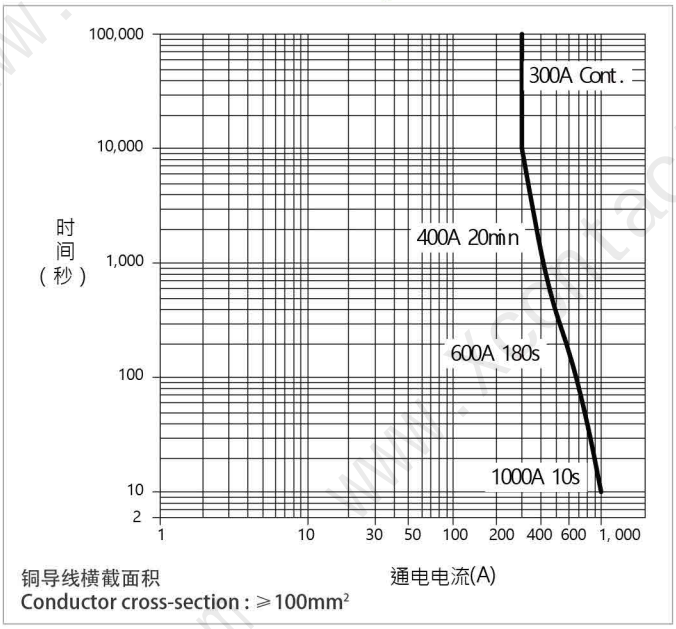

备注：1、以上数据曲线作为设计参考选型，不作为选型熔断器的依据；2、环境温度为23±5℃下。
Remarks: 1. The above data curve is used as a design reference for selection and not as a basis for selecting fuses; 2. At an ambient temperature of 23 ± 5 ℃.

尺寸图&接线原理图 Dimension & Wiring

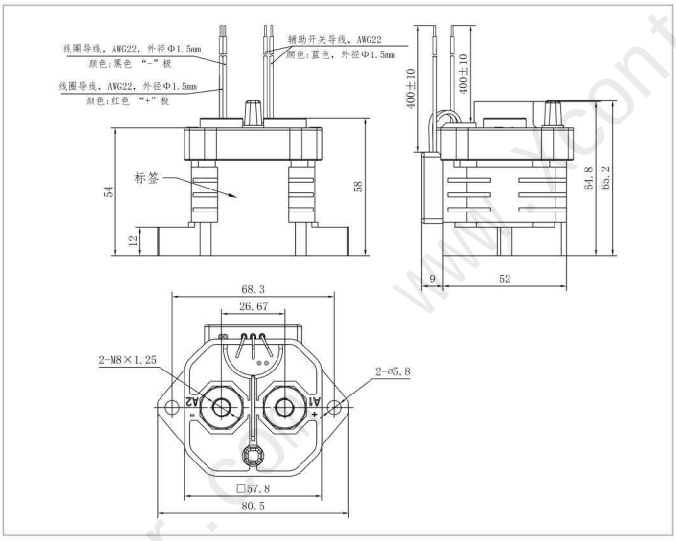

安装紧固件 Fastener	扭力范围 Torque Range	
	主触头接线 Main contacts wiring	底部固定 Product mount
M8×16 (配套提供 Provided)	9～12N・m	1.8～3.5N・m

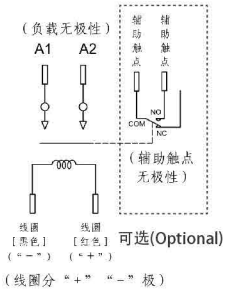

辅助开关 Aux Contact (可选 Optional):
AC-12:125VAC/3A；DC-12:30V/2A；
100mA/8V(最小电流 Current Min)

备注：
1、尺寸单位：mm，视角：⊕-⊳；
2、未注尺寸公差：
标称值<10mm为±0.3,
标称值10～50mm为±0.6,
标称值>50mm为±1.0;

Remarks:
1.Dimension unit: mm, viewing angle: ⊕-⊳；
2. Undeclared dimensional tolerance:
± 0.3 for nominal values<10mm,
The nominal value of 10-50mm is ± 0.6,±1.0 for nominal values greater than 50mm;

订货说明 Ordering Information

EVQ300 E 12 D A 5***

额定电流 Rated Current:
"300"＝300A

线圈电压 Coil Voltage:
"12"＝12VDC
"24"＝24VDC

安装方式 Mounting:
"A"＝立式安装
Bottom mount

产品代码
Product code

触点形式 Main contacts feature:
"E"＝主触头为一组常开，触头不分极性；1 form A(ON), non-polarized;
"G"＝主触头为一组常开，触头不分极性，带一组常开辅助触点；
1 form A(ON) add AUX contacts(ON), non-polarized;

线圈引出方式 Coil lead out:
"D"＝导线式，不带连接器；Wire Without Connectors
"E"＝导线式，带连接器；Wire With Connectors
（制造商推荐Manufacturer's recommendation）

特性 Features

◎ 产品符合欧盟RoHS指令。
The product complies with the EU RoHS directive.

◎ 密封且安全，对安装位置不敏感。
Hermetically sealed and intrinsically safe. Not mounting position sensitive.

◎ 在恶劣环境下，产品触点不会被氧化或污染。
Operates in harsh environments without oxidation or contamination of contacts.

◎ 高压触点间填充有惰性气体。
High voltage isolation between open contacts, inert gas filled contact chamber.

◎ 产品设计与管控符合IATF-16949。
Product design and quality control in accordance to IATF-16949.

◎ 典型应用于车载电池、电机控制器、充电桩、光伏、储能。
Typical applications apply to Battery electric vehicles ,DC motor controller protection,DC charging pile, Photovoltaic controls,Energy Storage systems.

线圈参数 Coil Data

线圈电压 Coil Voltage	动作电压 Pickup Voltage	释放电压 Dropout Voltage	瞬间启动电流 Inrush Current	平均保持电流 Avg. Holding Current	保持功耗 Holding Power
12VDC	9VDC Max	1.2VDC Min	3.8A Max	0.5A Approx	6W Max
24VDC	18VDC Max	2.4VDC Min	2A Max	0.25A Approx	6W Max

备注：1、线圈参数值是环境温度为20℃下的理论值，因线圈电阻的影响以上参数约±10%的变动范围；2、线圈可靠的工作电压范围为85%~110%Us额定电压；3、如需其他额定电压，可特殊订货。
Remarks: 1. The coil parameter values are theoretical values at an ambient temperature of 20 ℃, with a variation range of approximately ± 10% due to the influence of coil resistance; 2. The reliable working voltage range of the coil is 85%~110% of the rated voltage; 3. If other rated voltages are required, special orders can be made.

触点参数 Main Contact

触点形式 Contact Arrangement	1 Form A (SPST-NO)
触点极性 Contact Polarized	无极性 Nonpolarized
接触电阻(初始) Contact Resistance (Initial)	1mΩ (Typical Value)
负载电压 Loda Voltage	12-1000VDC
额定电流 Current (continuous)	350A
机械寿命 Mechanical Life	2×10^5 cycles
电气寿命 Electrical Life	图1 Graph 1
过载电流 Overload Current	图2 Graph 2

备注：1、阻性负载类别(L/R<0.1ms)；2、接通和分断转换频率，ON : OFF=1秒 : 9秒；3、测试环境温度为23±5℃；4、电气寿命是产品带载分断的次数。
Remarks: 1. Resistive load category (L/R<0.1ms); 2. Switching frequency between on and off, ON: OFF=1 sec: 9 sec; 3. The testing environment temperature is 23 ± 5 ℃; 4. The electrical life is the number of times a product breaks under load.

性能参数 Performance Parameter

绝缘电阻 Insulation Resistance	1000MΩ@1000VDC (Initial) ≤50MΩ@1000VDC (End)
介质耐压 Dielectric Withstanding Voltage	AC2500V 1min ≤10mA
动作时间 Operate Time	30ms (Include bounce)
释放时间 Release Time	12ms (Include bounce)
弹跳时间 Bounce Time	5ms
冲击 Shock	20g peak,1/2 sine(Operating)
正弦振动 Sine Vibration	20g peak,80~2000Hz
湿度 Humidity	5%~85%RH
温度 Operating Temperature	-40℃~+85℃
重量 Weight	470g Approx

备注：1、线圈施加额定工作电压，无续流二极管；2、测试环境温度为20℃。
Remarks: 1. Apply rated working voltage to the coil without a freewheeling diode; 2. The testing environment temperature is 20 ℃.

电气寿命参考曲线-图1
Electrical Life Reference Curve-Graph1

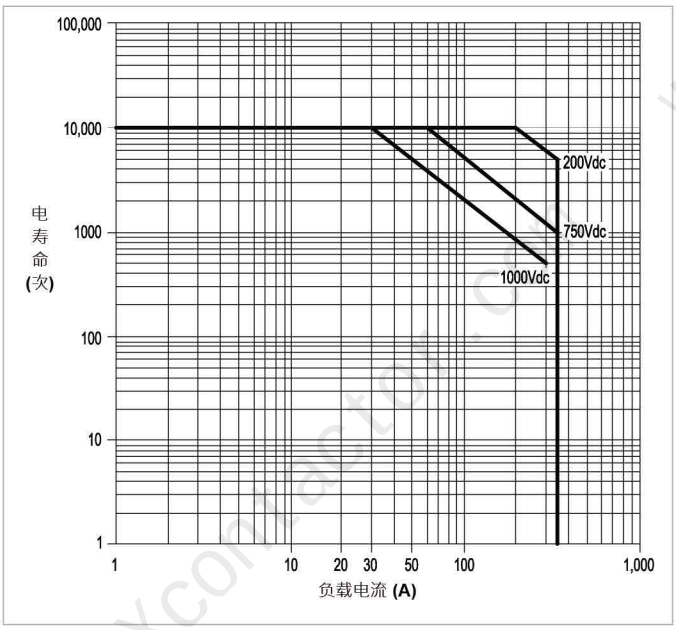

过载电流参考曲线-图2
Overload Current vs Time Reference Curve-Graph2

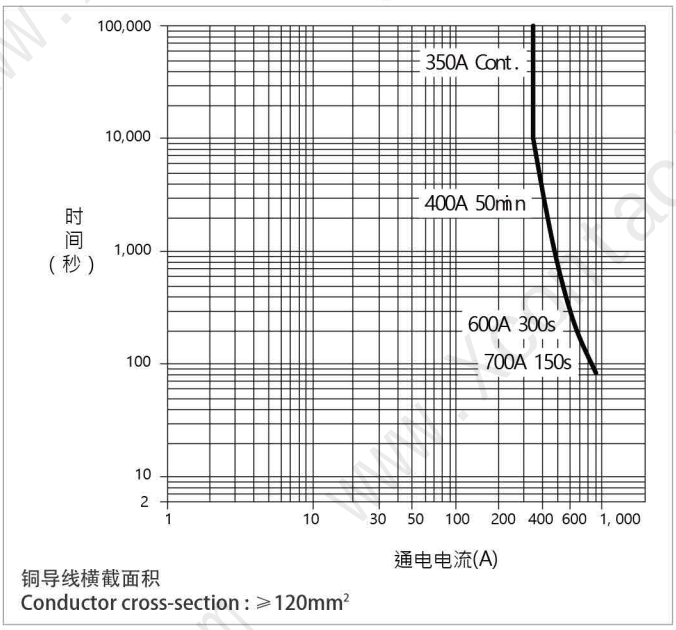

备注：1、以上数据曲线作为设计参考选型，不作为选型熔断器的依据；2、环境温度为23±5℃下。
Remarks: 1. The above data curve is used as a design reference for selection and not as a basis for selecting fuses; 2. At an ambient temperature of 23 ± 5 ℃.

尺寸图&接线原理图 Dimension & Wiring

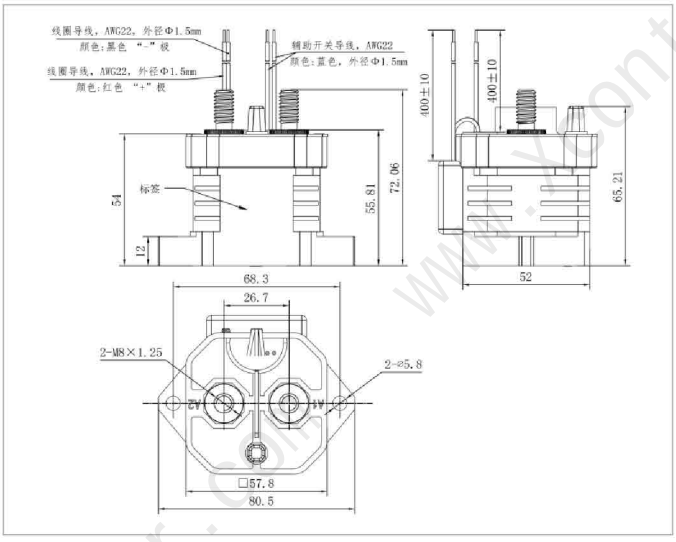

安装紧固件 Fastener	扭力范围 Torque Range	
	主触头接线 Main contacts wiring	底部固定 Product mount
M8 (配套提供 Provided)	9～12N・m	1.8～3.5N・m

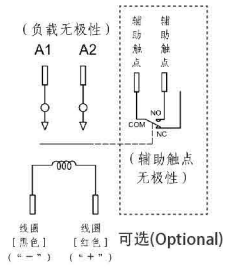

辅助开关 Aux Contact (可选 Optional):
AC-12:125VAC/3A；DC-12:30V/2A；
100mA/8V(最小电流 Current Min)

备注：
1、尺寸单位：mm，视角：⊕-⊳；
2、未注尺寸公差：
标称值<10mm为±0.3，
标称值10～50mm为±0.6，
标称值>50mm为±1.0；

Remarks:
1.Dimension unit: mm, viewing angle: ⊕-⊳；
2. Undeclared dimensional tolerance:
± 0.3 for nominal values<10mm,
The nominal value of 10-50mm is ± 0.6,±1.0 for nominal values greater than 50mm;

订货说明 Ordering Information

EVQ350 E 12 D A 5***

额定电流 Rated Current:
"350" =350A

线圈电压 Coil Voltage:
"12" =12VDC
"24" =24VDC

安装方式 Mounting:
"A" =立式安装
Bottom mount

产品代码
Product code

触点形式 Main contacts feature:
"E" =主触头为一组常开，触头不分极性；1 form A(ON), non-polarized;
"G" =主触头为一组常开，触头不分极性，带一组常开辅助触点；
1 form A(ON) add AUX contacts(ON), non-polarized;

线圈引出方式 Coil lead out:
"D" =导线式，不带连接器；Wire Without Connectors
"E" =导线式，带连接器；Wire With Connectors
(制造商推荐Manufacturer's recommendation)

EVQ400 Series-6

400A 直流接触器 DC Contactor

特性 Features

◎ 产品符合欧盟RoHS指令。
The product complies with the EU RoHS directive.

◎ 密封且安全，对安装位置不敏感。
Hermetically sealed and intrinsically safe. Not mounting position sensitive.

◎ 在恶劣环境下，产品触点不会被氧化或污染。
Operates in harsh environments without oxidation or contamination of contacts.

◎ 高压触点间填充有惰性气体。
High voltage isolation between open contacts, inert gas filled contact chamber.

◎ 产品设计与管控符合IATF-16949。
Product design and quality control in accordance to IATF-16949.

◎ 典型应用于车载电池、电机控制器、充电桩、光伏、储能。
Typical applications apply to Battery electric vehicles ,DC motor controller protection,DC charging pile, Photovoltaic controls,Energy Storage systems.

线圈参数 Coil Data

线圈电压 Coil Voltage	动作电压 Pickup Voltage	释放电压 Dropout Voltage	瞬间启动电流 Inrush Current	平均保持电流 Avg. Holding Current	保持功耗 Holding Power
12VDC	9VDC Max	1.2VDC Min	/	0.8A Approx	9.6W Max
24VDC	18VDC Max	2.4VDC Min	/	0.3A Approx	7W Max
48VDC	36VDC Max	4.8VDC Min	/	0.14A Approx	6.6W Max

备注：1、线圈参数值是环境温度为20℃下的理论值，因线圈电阻的影响以上参数约±10%的变动范围；2、线圈可靠的工作电压范围为85%~110%Us额定电压；3、如需其他额定电压，可特殊订货。
Remarks: 1. The coil parameter values are theoretical values at an ambient temperature of 20 ℃, with a variation range of approximately ± 10% due to the influence of coil resistance; 2. The reliable working voltage range of the coil is 85%~110% of the rated voltage; 3. If other rated voltages are required, special orders can be made.

触点参数 Main Contact

触点形式 Contact Arrangement	1 Form A (SPST-NO)
触点极性 Contact Polarized	无极性 Nonpolarized
接触电阻(初始) Contact Resistance (Initial)	1mΩ (Typical Value)
负载电压 Loda Voltage	12-450VDC
额定电流 Current (continuous)	400A
机械寿命 Mechanical Life	2×10^5 cycles
电气寿命 Electrical Life	图1 Graph 1
过载电流 Overload Current	图2 Graph 2

备注：1、阻性负载类别(L/R<0.1ms)；2、接通和分断转换频率，ON：OFF=1秒：9秒；3、测试环境温度为23±5℃；4、电气寿命是产品带载分断的次数。
Remarks:1. Resistive load category (L/R<0.1ms); 2. Switching frequency between on and off, ON: OFF=1 sec: 9 sec; 3. The testing environment temperature is 23 ± 5 ℃; 4. The electrical life is the number of times a product breaks under load.

性能参数 Performance Parameter

绝缘电阻 Insulation Resistance	1000MΩ@1000VDC (Initial) ≤50MΩ@1000VDC (End)
介质耐压 Dielectric Withstanding Voltage	AC2500V 1min ≤10mA
动作时间 Operate Time	40ms (Include bounce)
释放时间 Release Time	12ms (Include bounce)
弹跳时间 Bounce Time	5ms
冲击 Shock	20g peak,1/2 sine(Operating)
正弦振动 Sine Vibration	20g peak,80~2000Hz
湿度 Humidity	5%~85%RH
温度 Operating Temperature	-40℃~+85℃
重量 Weight	575g Approx

备注：1、线圈施加额定工作电压，无续流二极管；2、测试环境温度为20℃。
Remarks: 1. Apply rated working voltage to the coil without a freewheeling diode; 2. The testing environment temperature is 20 ℃.

电气寿命参考曲线-图1
Electrical Life Reference Curve-Graph1

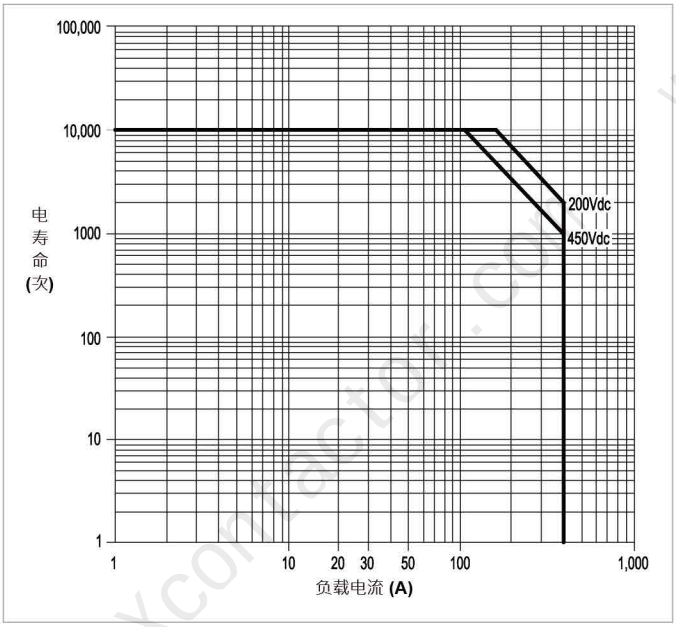

过载电流参考曲线-图2
Overload Current vs Time Reference Curve-Graph2

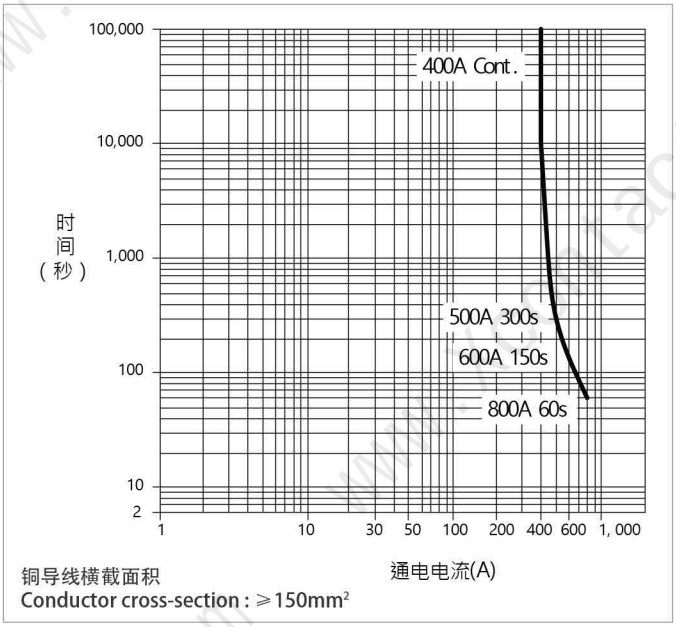

备注：1、以上数据曲线作为设计参考选型，不作为选型熔断器的依据；2、环境温度为23±5℃下。
Remarks: 1. The above data curve is used as a design reference for selection and not as a basis for selecting fuses; 2. At an ambient temperature of 23 ± 5 ℃.

尺寸图&接线原理图 Dimension & Wiring

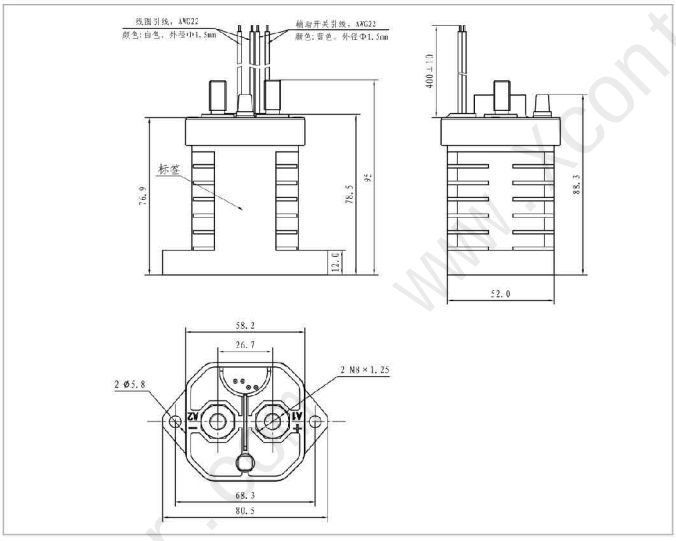

安装紧固件 Fastener	扭力范围 Torque Range	
	主触头接线 Main contacts wiring	底部固定 Product mount
M8 (配套提供 Provided)	9～12N・m	1.8～3.5N・m

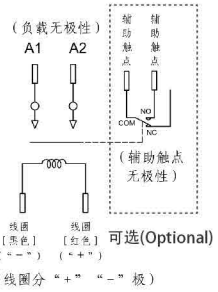

辅助开关 Aux Contact（可选 Optional）：
AC-12:125VAC/3A；DC-12:30V/2A；
100mA/8V(最小电流 Current Min)

备注：
1、尺寸单位：mm，视角：⊕-⊳；
2、未注尺寸公差：
标称值<10mm为±0.3，
标称值10～50mm为±0.6，
标称值>50mm为±1.0；

Remarks:
1.Dimension unit: mm, viewing angle: ⊕-⊳；
2. Undeclared dimensional tolerance:
± 0.3 for nominal values<10mm,
The nominal value of 10-50mm is ± 0.6,±1.0 for nominal values greater than 50mm;

订货说明 Ordering Information

EVQ400 E 12 D A 6***

额定电流 Rated Current：
"400"＝400A

触点形式 Main contacts feature：
"E"＝主触头为一组常开，触头不分极性；1 form A(ON), non-polarized;
"G"＝主触头为一组常开，触头不分极性，带一组常开辅助触点；
1 form A(ON) add AUX contacts(ON), non-polarized;

线圈电压 Coil Voltage：
"12"＝12VDC
"24"＝24VDC
"48"＝48VDC

线圈引出方式 Coil lead out：
"D"＝导线式，不带连接器；Wire Without Connectors
"E"＝导线式，带连接器；Wire With Connectors
（制造商推荐Manufacturer's recommendation）

安装方式 Mounting：
"A"＝立式安装
Bottom mount

产品代码
Product code

EVQ400 Series-8

400A 直流接触器 DC Contactor

特性 Features

◎ 产品符合欧盟RoHS指令。
The product complies with the EU RoHS directive.

◎ 密封且安全，对安装位置不敏感。
Hermetically sealed and intrinsically safe. Not mounting position sensitive.

◎ 在恶劣环境下，产品触点不会被氧化或污染。
Operates in harsh environments without oxidation or contamination of contacts.

◎ 高压触点间填充有惰性气体。
High voltage isolation between open contacts, inert gas filled contact chamber.

◎ 产品设计与管控符合IATF-16949。
Product design and quality control in accordance to IATF-16949.

◎ 典型应用于车载电池、电机控制器、充电桩、光伏、储能。
Typical applications apply to Battery electric vehicles ,DC motor controller protection,DC charging pile, Photovoltaic controls,Energy Storage systems.

线圈参数 Coil Data

线圈电压 Coil Voltage	动作电压 Pickup Voltage	释放电压 Dropout Voltage	瞬间启动电流 Inrush Current	平均保持电流 Avg. Holding Current	保持功耗 Holding Power
12VDC	9VDC Max	1.2VDC Min	3.8A Max	0.5A Approx	6W Max
24VDC	18VDC Max	2.4VDC Min	2A Max	0.25A Approx	6W Max

备注：1、线圈参数值是环境温度为20℃下的理论值，因线圈电阻的影响以上参数约±10%的变动范围；2、线圈可靠的工作电压范围为85%~110%Us额定电压；3、如需其他额定电压，可特殊订货。
Remarks: 1. The coil parameter values are theoretical values at an ambient temperature of 20 ℃, with a variation range of approximately ± 10% due to the influence of coil resistance; 2. The reliable working voltage range of the coil is 85%~110% of the rated voltage; 3. If other rated voltages are required, special orders can be made.

触点参数 Main Contact

触点形式 Contact Arrangement	1 Form A (SPST-NO)
触点极性 Contact Polarized	无极性 Nonpolarized
接触电阻(初始) Contact Resistance (Initial)	1mΩ (Typical Value)
负载电压 Loda Voltage	12-1500VDC
额定电流 Current (continuous)	400A
机械寿命 Mechanical Life	2×10^5 cycles
电气寿命 Electrical Life	图1 Graph 1
过载电流 Overload Current	图2 Graph 2

备注：1、阻性负载类别(L/R<0.1ms)；2、接通和分断转换频率，ON : OFF=1秒 : 9秒；3、测试环境温度为23±5℃；4、电气寿命是产品带载分断的次数。
Remarks: 1. Resistive load category (L/R<0.1ms); 2. Switching frequency between on and off, ON: OFF=1 sec: 9 sec; 3. The testing environment temperature is 23 ± 5 ℃; 4. The electrical life is the number of times a product breaks under load.

性能参数 Performance Parameter

绝缘电阻 Insulation Resistance	1000MΩ@2500VDC (Initial) ≤50MΩ@1000VDC (End)
介质耐压 Dielectric Withstanding Voltage	AC3500V 1min ≤10mA
动作时间 Operate Time	40ms (Include bounce)
释放时间 Release Time	20ms (Include bounce)
弹跳时间 Bounce Time	5ms
冲击 Shock	20g peak,1/2 sine(Operating)
正弦振动 Sine Vibration	20g peak,80~2000Hz
湿度 Humidity	5%~85%RH
温度 Operating Temperature	-40℃~+85℃
重量 Weight	890g Approx

备注：1、线圈施加额定工作电压，无续流二极管；2、测试环境温度为20℃。
Remarks: 1. Apply rated working voltage to the coil without a freewheeling diode; 2. The testing environment temperature is 20 ℃.

电气寿命参考曲线-图1
Electrical Life Reference Curve-Graph1

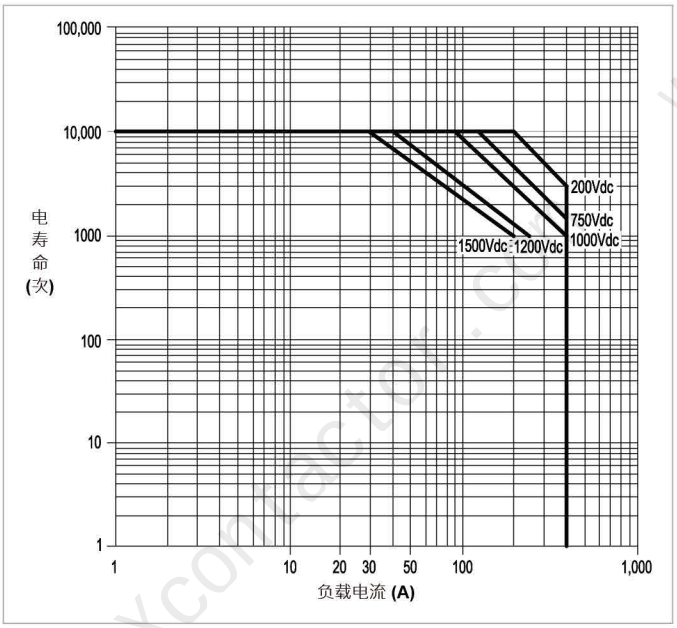

过载电流参考曲线-图2
Overload Current vs Time Reference Curve-Graph2

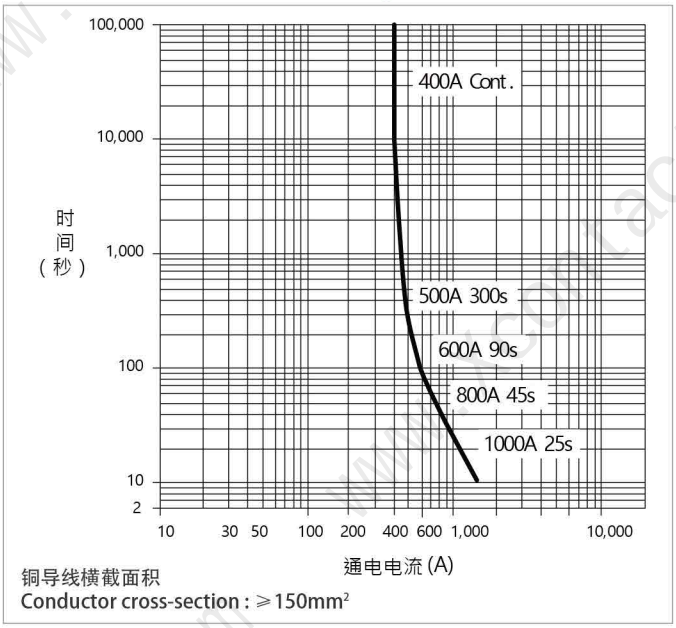

备注：1、以上数据曲线作为设计参考选型，不作为选型熔断器的依据；2、环境温度为23±5℃下。
Remarks: 1.The above data curve is used as a design reference for selection and not as a basis for selecting fuses; 2. At an ambient temperature of 23 ± 5 ℃.

尺寸图&接线原理图 Dimension & Wiring

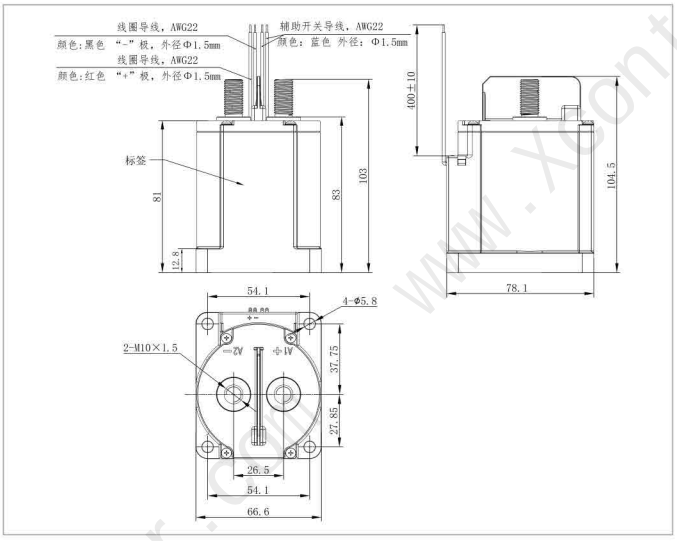

安装紧固件 Fastener	扭力范围 Torque Range	
	主触头接线 Main contacts wiring	底部固定 Product mount
M10 (配套提供 Provided)	9～12N・m	1.8～3.5N・m

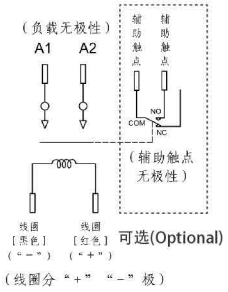

辅助开关 Aux Contact (可选 Optional):
AC-12:125VAC/3A；DC-12:30V/2A；
100mA/8V(最小电流 Current Min)

备注：
1、尺寸单位：mm，视角：⊕-⊳；
2、未注尺寸公差：
标称值<10mm为±0.3，
标称值10～50mm为±0.6，
标称值>50mm为±1.0；

Remarks:
1.Dimension unit: mm, viewing angle: ⊕-⊳；
2. Undeclared dimensional tolerance:
± 0.3 for nominal values<10mm,
The nominal value of 10-50mm is ± 0.6,±1.0 for nominal values greater than 50mm;

订货说明 Ordering Information

EVQ400 E 12 D A 8***

额定电流 Rated Current:
"400"＝400A

触点形式 Main contacts feature:
"E"＝主触头为一组常开，触头不分极性；1 form A(ON), non-polarized;
"G"＝主触头为一组常开，触头不分极性，带一组常开辅助触点；
1 form A(ON) add AUX contacts(ON), non-polarized;

线圈电压 Coil Voltage:
"12"＝12VDC
"24"＝24VDC

线圈引出方式 Coil lead out:
"D"＝导线式，不带连接器；Wire Without Connectors
"E"＝导线式，带连接器；Wire With Connectors
(制造商推荐Manufacturer's recommendation)

安装方式 Mounting:
"A"＝立式安装
Bottom mount

产品代码
Product code

EVQ400 Series-5G

400A 直流接触器 DC Contactor

特性 Features

◎ 产品符合欧盟RoHS指令。
The product complies with the EU RoHS directive.

◎ 密封且安全，对安装位置不敏感。
Hermetically sealed and intrinsically safe. Not mounting position sensitive.

◎ 在恶劣环境下，产品触点不会被氧化或污染。
Operates in harsh environments without oxidation or contamination of contacts.

◎ 高压触点间填充有惰性气体。
High voltage isolation between open contacts, inert gas filled contact chamber.

◎ 产品设计与管控符合IATF-16949。
Product design and quality control in accordance to IATF-16949.

◎ 典型应用于车载电池、电机控制器、充电桩、光伏、储能。
Typical applications apply to Battery electric vehicles ,DC motor controller protection,DC charging pile, Photovoltaic controls,Energy Storage systems.

线圈参数 Coil Data

线圈电压 Coil Voltage	动作电压 Pickup Voltage	释放电压 Dropout Voltage	瞬间启动电流 Inrush Current	平均保持电流 Avg. Holding Current	保持功耗 Holding Power
12VDC	9VDC Max	1.2VDC Min	3.8A Max	0.5A Approx	6W Max
24VDC	18VDC Max	2.4VDC Min	2A Max	0.25A Approx	6W Max

备注：1、线圈参数值是环境温度为20℃下的理论值，因线圈电阻的影响以上参数约±10%的变动范围；2、线圈可靠的工作电压范围为85%~110%Us额定电压；3、如需其他额定电压，可特殊订货。
Remarks: 1. The coil parameter values are theoretical values at an ambient temperature of 20 ℃, with a variation range of approximately ± 10% due to the influence of coil resistance; 2. The reliable working voltage range of the coil is 85%~110% of the rated voltage; 3. If other rated voltages are required, special orders can be made.

触点参数 Main Contact

触点形式 Contact Arrangement	1 Form A (SPST-NO)
触点极性 Contact Polarized	无极性 Nonpolarized
接触电阻(初始) Contact Resistance (Initial)	1mΩ (Typical Value)
负载电压 Loda Voltage	12-450VDC
额定电流 Current (continuous)	400A
机械寿命 Mechanical Life	2×10^5 cycles
电气寿命 Electrical Life	图1 Graph 1
过载电流 Overload Current	图2 Graph 2

备注：1、阻性负载类别(L/R<0.1ms)；2、接通和分断转换频率，ON : OFF=1秒 : 9秒；3、测试环境温度为23±5℃；4、电气寿命是产品带载分断的次数。
Remarks: 1. Resistive load category (L/R<0.1ms); 2. Switching frequency between on and off, ON: OFF=1 sec: 9 sec; 3. The testing environment temperature is 23 ± 5 ℃; 4. The electrical life is the number of times a product breaks under load.

性能参数 Performance Parameter

绝缘电阻 Insulation Resistance	1000MΩ@1000VDC (Initial) ≤50MΩ@1000VDC (End)
介质耐压 Dielectric Withstanding Voltage	AC2500V 1min ≤10mA
动作时间 Operate Time	30ms (Include bounce)
释放时间 Release Time	12ms (Include bounce)
弹跳时间 Bounce Time	5ms
冲击 Shock	20g peak,1/2 sine(Operating)
正弦振动 Sine Vibration	20g peak,80~2000Hz
湿度 Humidity	5%~85%RH
温度 Operating Temperature	-40℃~+85℃
重量 Weight	480g Approx

备注：1、线圈施加额定工作电压，无续流二极管；2、测试环境温度为20℃。
Remarks: 1. Apply rated working voltage to the coil without a freewheeling diode; 2. The testing environment temperature is 20 ℃.

电气寿命参考曲线-图1
Electrical Life Reference Curve-Graph1

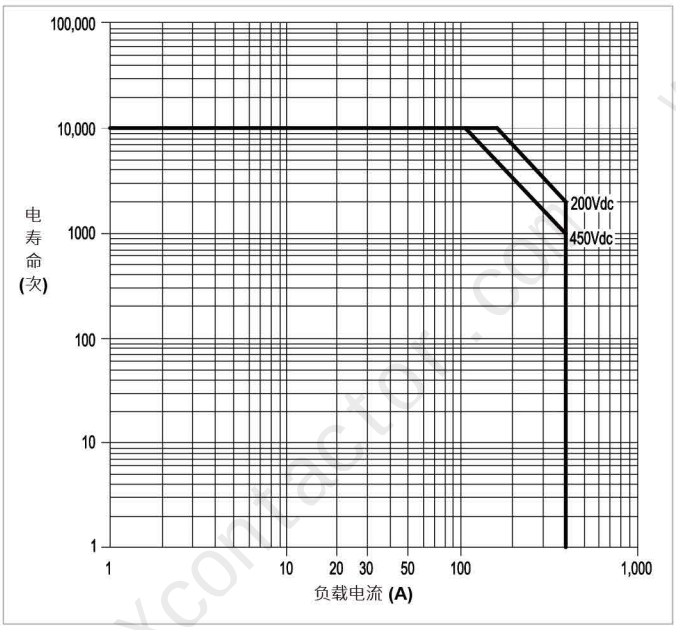

过载电流参考曲线-图2
Overload Current vs Time Reference Curve-Graph2

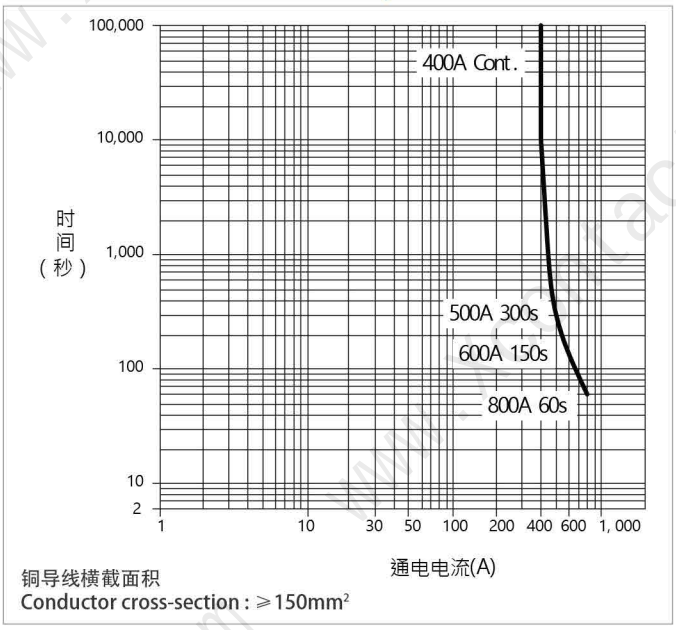

备注：1、以上数据曲线作为设计参考选型，不作为选型熔断器的依据；2、环境温度为23±5℃下。
Remarks: 1. The above data curve is used as a design reference for selection and not as a basis for selecting fuses; 2. At an ambient temperature of 23 ± 5 ℃.

尺寸图&接线原理图 Dimension & Wiring

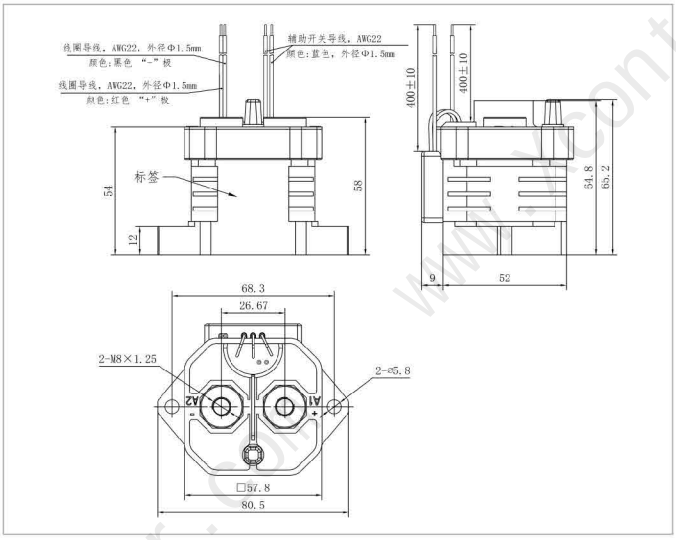

安装紧固件 Fastener	扭力范围 Torque Range	
	主触头接线 Main contacts wiring	底部固定 Product mount
M8×16 (配套提供 Provided)	9～12N・m	1.8～3.5N・m

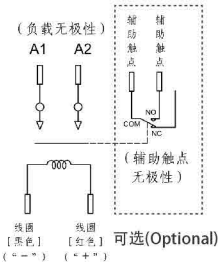

辅助开关 Aux Contact (可选 Optional):
AC-12:125VAC/3A；DC-12:30V/2A；
100mA/8V(最小电流 Current Min)

备注：
1、尺寸单位：mm，视角：⊕-⊳；
2、未注尺寸公差：
标称值<10mm为±0.3,
标称值10～50mm为±0.6,
标称值>50mm为±1.0;

Remarks:
1.Dimension unit: mm, viewing angle: ⊕-⊳；
2. Undeclared dimensional tolerance:
± 0.3 for nominal values<10mm,
The nominal value of 10-50mm is ± 0.6,±1.0 for nominal values greater than 50mm;

订货说明 Ordering Information

EVQ400 E 12 D A 5***

额定电流 Rated Current:
"400" =400A

线圈电压 Coil Voltage:
"12" =12VDC
"24" =24VDC

安装方式 Mounting:
"A" =立式安装
Bottom mount

产品代码
Product code

触点形式 Main contacts feature:
"E" =主触头为一组常开，触头不分极性；1 form A(ON), non-polarized;
"G" =主触头为一组常开，触头不分极性，带一组常开辅助触点；
1 form A(ON) add AUX contacts(ON), non-polarized;

线圈引出方式 Coil lead out:
"D" =导线式，不带连接器；Wire Without Connectors
"E" =导线式，带连接器；Wire With Connectors
（制造商推荐Manufacturer's recommendation）

EVQ500 Series-8

500A 直流接触器 DC Contactor

特性 Features

◎ 产品符合欧盟RoHS指令。
The product complies with the EU RoHS directive.

◎ 密封且安全，对安装位置不敏感。
Hermetically sealed and intrinsically safe. Not mounting position sensitive.

◎ 在恶劣环境下，产品触点不会被氧化或污染。
Operates in harsh environments without oxidation or contamination of contacts.

◎ 高压触点间填充有惰性气体。
High voltage isolation between open contacts, inert gas filled contact chamber.

◎ 产品设计与管控符合IATF-16949。
Product design and quality control in accordance to IATF-16949.

◎ 典型应用于车载电池、电机控制器、充电桩、光伏、储能。
Typical applications apply to Battery electric vehicles ,DC motor controller protection,DC charging pile, Photovoltaic controls,Energy Storage systems.

线圈参数 Coil Data

线圈电压 Coil Voltage	动作电压 Pickup Voltage	释放电压 Dropout Voltage	瞬间启动电流 Inrush Current	平均保持电流 Avg. Holding Current	保持功耗 Holding Power
12VDC	9VDC Max	1.2VDC Min	3.8A Max	0.5A Approx	6W Max
24VDC	18VDC Max	2.4VDC Min	2A Max	0.25A Approx	6W Max

备注：1、线圈参数值是环境温度为20℃下的理论值，因线圈电阻的影响以上参数约±10%的变动范围；2、线圈可靠的工作电压范围为85%~110%Us额定电压；3、如需其他额定电压，可特殊订货。
Remarks: 1. The coil parameter values are theoretical values at an ambient temperature of 20 ℃, with a variation range of approximately ± 10% due to the influence of coil resistance; 2. The reliable working voltage range of the coil is 85%~110% of the rated voltage; 3. If other rated voltages are required, special orders can be made.

触点参数 Main Contact

触点形式 Contact Arrangement	1 Form A (SPST-NO)
触点极性 Contact Polarized	无极性 Nonpolarized
接触电阻(初始) Contact Resistance (Initial)	1mΩ (Typical Value)
负载电压 Loda Voltage	12-1500VDC
额定电流 Current (continuous)	500A
机械寿命 Mechanical Life	2×10^5 cycles
电气寿命 Electrical Life	图1 Graph 1
过载电流 Overload Current	图2 Graph 2

备注：1、阻性负载类别(L/R<0.1ms)；2、接通和分断转换频率，ON : OFF=1秒 : 9秒；3、测试环境温度为23±5℃；4、电气寿命是产品带载分断的次数。
Remarks: 1. Resistive load category (L/R<0.1ms); 2. Switching frequency between on and off, ON: OFF=1 sec: 9 sec; 3. The testing environment temperature is 23 ± 5 ℃; 4. The electrical life is the number of times a product breaks under load.

性能参数 Performance Parameter

绝缘电阻 Insulation Resistance	1000MΩ@2500VDC (Initial) ≤50MΩ@1000VDC (End)
介质耐压 Dielectric Withstanding Voltage	AC3500V 1min ≤10mA
动作时间 Operate Time	40ms (Include bounce)
释放时间 Release Time	20ms (Include bounce)
弹跳时间 Bounce Time	5ms
冲击 Shock	20g peak,1/2 sine(Operating)
正弦振动 Sine Vibration	20g peak,80~2000Hz
湿度 Humidity	5%~85%RH
温度 Operating Temperature	-40℃~+85℃
重量 Weight	890g Approx

备注：1、线圈施加额定工作电压，无续流二极管；2、测试环境温度为20℃。
Remarks: 1. Apply rated working voltage to the coil without a freewheeling diode; 2. The testing environment temperature is 20 ℃.

电气寿命参考曲线-图1
Electrical Life Reference Curve-Graph1

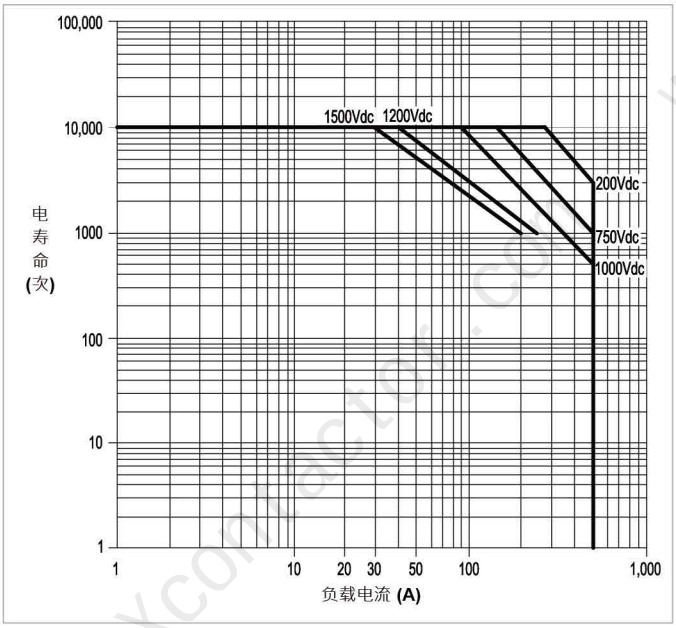

过载电流参考曲线-图2
Overload Current vs Time Reference Curve-Graph2

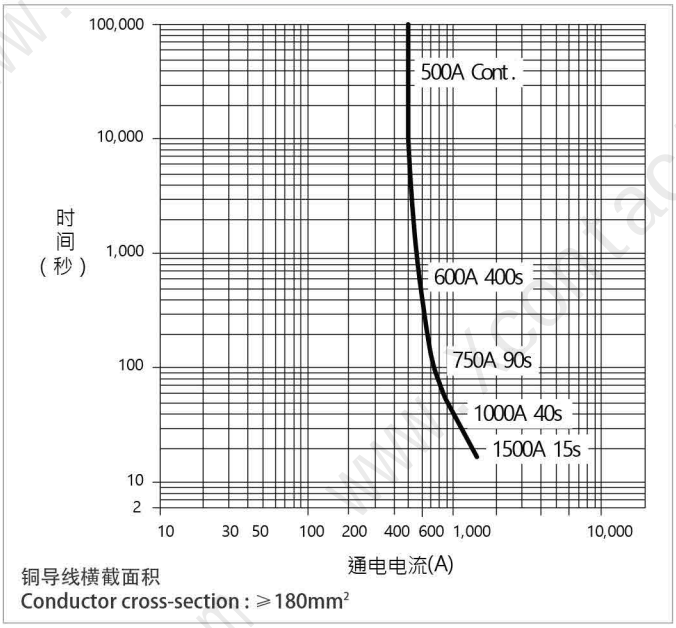

备注：1、以上数据曲线作为设计参考选型，不作为选型熔断器的依据；2、环境温度为23±5℃下。
Remarks: 1. The above data curve is used as a design reference for selection and not as a basis for selecting fuses; 2. At an ambient temperature of 23 ± 5 ℃.

尺寸图&接线原理图 Dimension & Wiring

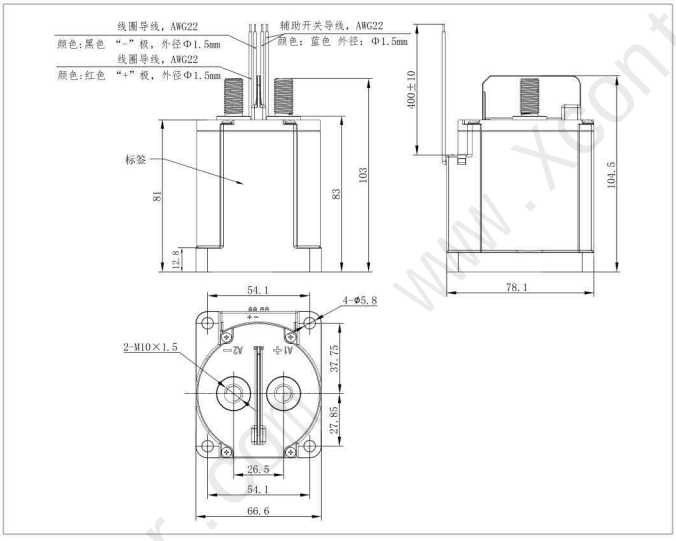

安装紧固件 Fastener	扭力范围 Torque Range	
	主触头接线 Main contacts wiring	底部固定 Product mount
M10 (配套提供 Provided)	9～12N・m	1.8～3.5N・m

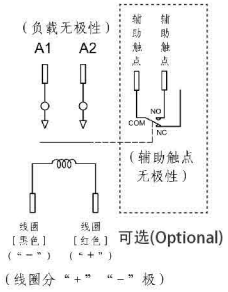

辅助开关 Aux Contact (可选 Optional):
AC-12:125VAC/3A；DC-12:30V/2A；
100mA/8V(最小电流 Current Min)

备注：
1、尺寸单位：mm，视角：⊕-⊳；
2、未注尺寸公差：
标称值<10mm为±0.3，
标称值10～50mm为±0.6，
标称值>50mm为±1.0；

Remarks:
1.Dimension unit: mm, viewing angle: ⊕-⊳；
2. Undeclared dimensional tolerance:
± 0.3 for nominal values<10mm,
The nominal value of 10-50mm is ± 0.6,±1.0 for nominal values greater than 50mm;

订货说明 Ordering Information

EVQ500 E 12 D A 8***

额定电流 Rated Current:
"500"＝500A

触点形式 Main contacts feature:
"E"＝主触头为一组常开，触头不分极性；1 form A(ON), non-polarized;
"G"＝主触头为一组常开，触头不分极性，带一组常开辅助触点；
1 form A(ON) add AUX contacts(ON), non-polarized;

线圈电压 Coil Voltage:
"12"＝12VDC
"24"＝24VDC

线圈引出方式 Coil lead out:
"D"＝导线式，不带连接器；Wire Without Connectors
"E"＝导线式，带连接器；Wire With Connectors
（制造商推荐Manufacturer's recommendation）

安装方式 Mounting:
"A"＝立式安装
Bottom mount

产品代码
Product code

EVQ600 Series-8

600A 直流接触器 DC Contactor

特性 Features

◎ 产品符合欧盟RoHS指令。
The product complies with the EU RoHS directive.

◎ 密封且安全，对安装位置不敏感。
Hermetically sealed and intrinsically safe. Not mounting position sensitive.

◎ 在恶劣环境下，产品触点不会被氧化或污染。
Operates in harsh environments without oxidation or contamination of contacts.

◎ 高压触点间填充有惰性气体。
High voltage isolation between open contacts, inert gas filled contact chamber.

◎ 产品设计与管控符合IATF-16949。
Product design and quality control in accordance to IATF-16949.

◎ 典型应用于车载电池、电机控制器、充电桩、光伏、储能。
Typical applications apply to Battery electric vehicles ,DC motor controller protection,DC charging pile, Photovoltaic controls,Energy Storage systems.

线圈参数 Coil Data

线圈电压 Coil Voltage	动作电压 Pickup Voltage	释放电压 Dropout Voltage	瞬间启动电流 Inrush Current	平均保持电流 Avg. Holding Current	保持功耗 Holding Power
12VDC	9VDC Max	1.2VDC Min	3.8A Max	0.5A Approx	6W Max
24VDC	18VDC Max	2.4VDC Min	2A Max	0.25A Approx	6W Max

备注：1、线圈参数值是环境温度为20℃下的理论值，因线圈电阻的影响以上参数约±10%的变动范围；2、线圈可靠的工作电压范围为85%~110%Us额定电压；3、如需其他额定电压，可特殊订货。
Remarks: 1. The coil parameter values are theoretical values at an ambient temperature of 20 ℃, with a variation range of approximately ± 10% due to the influence of coil resistance; 2. The reliable working voltage range of the coil is 85%~110% of the rated voltage; 3. If other rated voltages are required, special orders can be made.

触点参数 Main Contact

触点形式 Contact Arrangement	1 Form A (SPST-NO)
触点极性 Contact Polarized	无极性 Nonpolarized
接触电阻(初始) Contact Resistance (Initial)	1mΩ (Typical Value)
负载电压 Loda Voltage	12-1500VDC
额定电流 Current (continuous)	600A
机械寿命 Mechanical Life	2×10^5 cycles
电气寿命 Electrical Life	图1 Graph 1
过载电流 Overload Current	图2 Graph 2

备注：1、阻性负载类别(L/R<0.1ms)；2、接通和分断转换频率，ON : OFF=1秒 : 9秒；3、测试环境温度为23±5℃；4、电气寿命是产品带载分断的次数。
Remarks: 1. Resistive load category (L/R<0.1ms); 2. Switching frequency between on and off, ON: OFF=1 sec: 9 sec; 3. The testing environment temperature is 23 ± 5 ℃; 4. The electrical life is the number of times a product breaks under load.

性能参数 Performance Parameter

绝缘电阻 Insulation Resistance	1000MΩ@2500VDC (Initial) ≤50MΩ@1000VDC (End)
介质耐压 Dielectric Withstanding Voltage	AC3500V 1min ≤10mA
动作时间 Operate Time	40ms (Include bounce)
释放时间 Release Time	20ms (Include bounce)
弹跳时间 Bounce Time	5ms
冲击 Shock	20g peak,1/2 sine(Operating)
正弦振动 Sine Vibration	20g peak,80~2000Hz
湿度 Humidity	5%~85%RH
温度 Operating Temperature	-40℃~+85℃
重量 Weight	890g Approx

备注：1、线圈施加额定工作电压，无续流二极管；2、测试环境温度为20℃。
Remarks: 1. Apply rated working voltage to the coil without a freewheeling diode; 2. The testing environment temperature is 20 ℃.

电气寿命参考曲线-图1
Electrical Life Reference Curve-Graph1

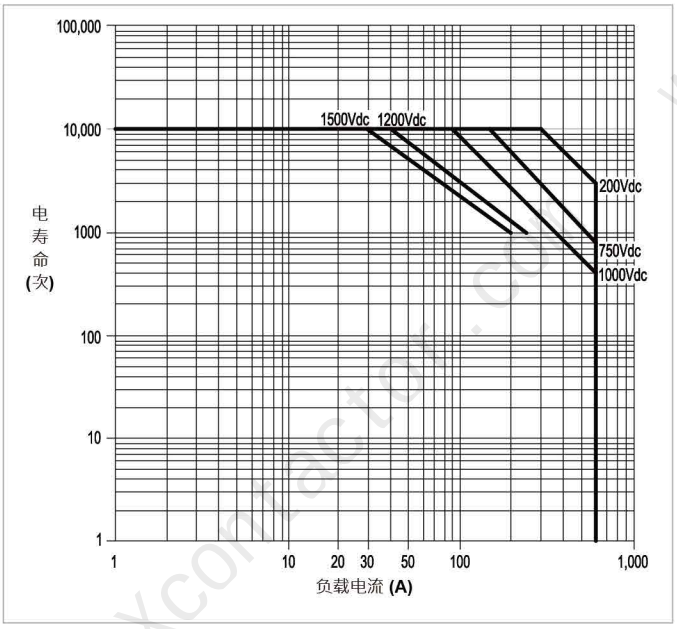

过载电流参考曲线-图2
Overload Current vs Time Reference Curve-Graph2

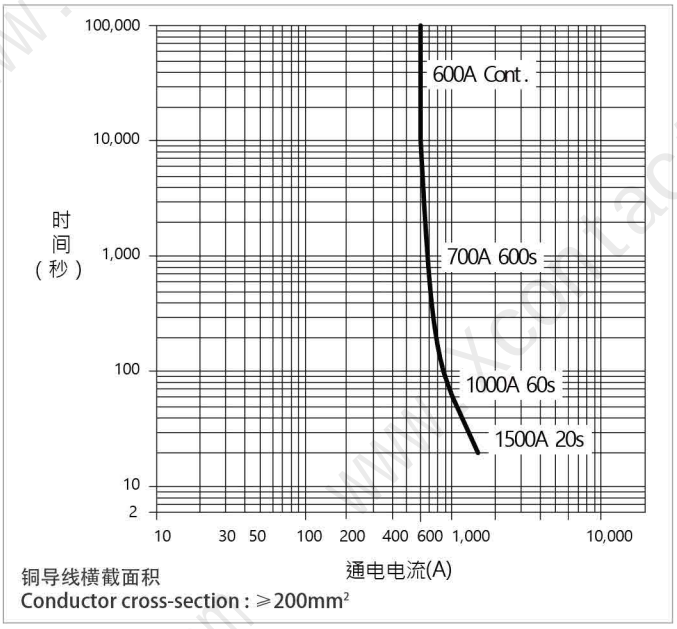

备注：1、以上数据曲线作为设计参考选型，不作为选型熔断器的依据；2、环境温度为23±5℃下。
Remarks: 1. The above data curve is used as a design reference for selection and not as a basis for selecting fuses; 2. At an ambient temperature of 23 ± 5 ℃.

尺寸图&接线原理图 Dimension & Wiring

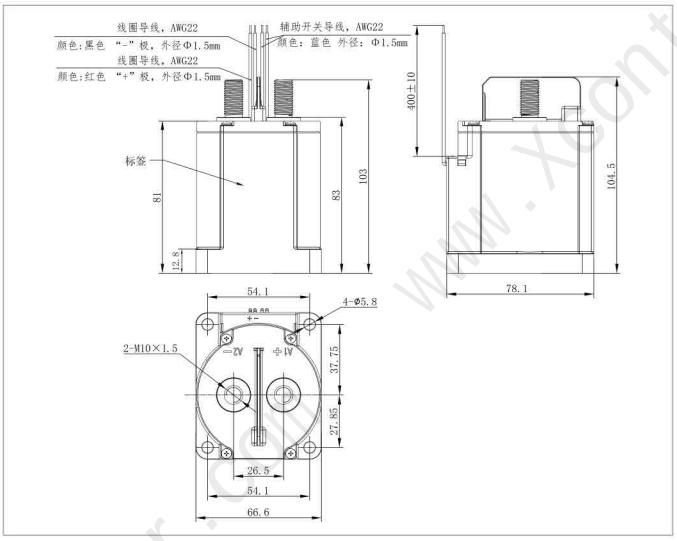

安装紧固件 Fastener	扭力范围 Torque Range	
	主触头接线 Main contacts wiring	底部固定 Product mount
M10 (配套提供 Provided)	9～12N・m	1.8～3.5N・m

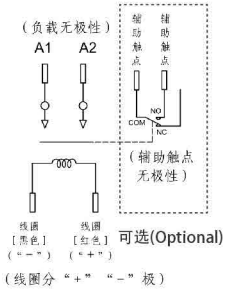

辅助开关 Aux Contact (可选 Optional):
AC-12:125VAC/3A；DC-12:30V/2A；
100mA/8V(最小电流 Current Min)

备注：
1、尺寸单位：mm，视角：⊕-⊳；
2、未注尺寸公差：
标称值<10mm为±0.3,
标称值10～50mm为±0.6,
标称值>50mm为±1.0;

Remarks:
1.Dimension unit: mm, viewing angle: ⊕-⊳；
2. Undeclared dimensional tolerance:
± 0.3 for nominal values<10mm,
The nominal value of 10-50mm is ± 0.6,±1.0 for nominal values greater than 50mm;

订货说明 Ordering Information

EVQ600 E 12 D A 8***

额定电流 Rated Current:
"600"＝600A

触点形式 Main contacts feature:
"E"＝主触头为一组常开，触头不分极性；1 form A(ON), non-polarized;
"G"＝主触头为一组常开，触头不分极性，带一组常开辅助触点；
1 form A(ON) add AUX contacts(ON), non-polarized;

线圈电压 Coil Voltage:
"12"＝12VDC
"24"＝24VDC

线圈引出方式 Coil lead out:
"D"＝导线式，不带连接器；Wire Without Connectors
"E"＝导线式，带连接器；Wire With Connectors
(制造商推荐Manufacturer's recommendation)

安装方式 Mounting:
"A"＝立式安装
Bottom mount

产品代码
Product code

特性 Features

◎ 产品符合欧盟RoHS指令。
The product complies with the EU RoHS directive.

◎ 密封且安全，对安装位置不敏感。
Hermetically sealed and intrinsically safe. Not mounting position sensitive.

◎ 在恶劣环境下，产品触点不会被氧化或污染。
Operates in harsh environments without oxidation or contamination of contacts.

◎ 高压触点间填充有惰性气体。
High voltage isolation between open contacts, inert gas filled contact chamber.

◎ 产品设计与管控符合IATF-16949。
Product design and quality control in accordance to IATF-16949.

◎ 典型应用于车载电池、电机控制器、充电桩、光伏、储能。
Typical applications apply to Battery electric vehicles ,DC motor controller protection,DC charging pile, Photovoltaic controls,Energy Storage systems.

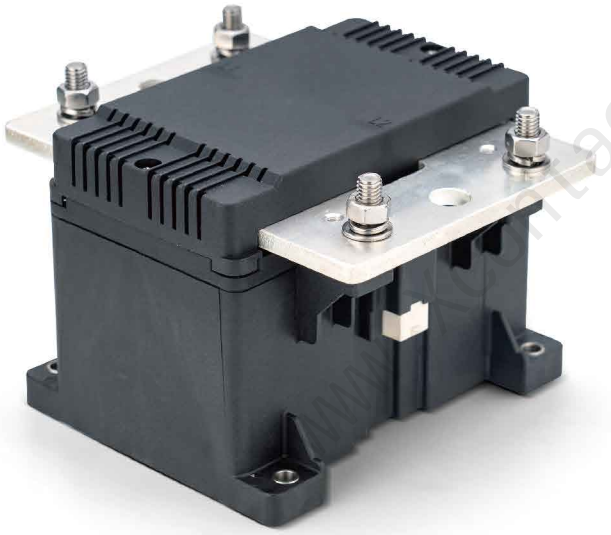

线圈参数 Coil Data

线圈电压 Coil Voltage	动作电压 Pickup Voltage	释放电压 Dropout Voltage	瞬间启动电流 Inrush Current	平均保持电流 Avg. Holding Current	保持功耗 Holding Power
12/24VDC	9VDC Max	<6.5VDC	6.5A	0.4A@12VDC 0.2A@24VDC	5W

备注：1、线圈参数值是环境温度为20℃下的理论值，因线圈电阻的影响以上参数约±10%的变动范围；2、线圈可靠的工作电压范围为85%~110%Us额定电压；3、如需其他额定电压，可特殊订货。
Remarks: 1. The coil parameter values are theoretical values at an ambient temperature of 20 ℃, with a variation range of approximately ± 10% due to the influence of coil resistance; 2. The reliable working voltage range of the coil is 85%~110% of the rated voltage; 3. If other rated voltages are required, special orders can be made.

触点参数 Main Contact

触点形式 Contact Arrangement	1 Form A (SPST-NO)
触点极性 Contact Polarized	无极性 Nonpolarized
接触电阻(初始) Contact Resistance (Initial)	1mΩ (Typical Value)
负载电压 Loda Voltage	12-1500VDC
额定电流 Current (continuous)	800A
机械寿命 Mechanical Life	2×10^5 cycles
电气寿命 Electrical Life	图1 Graph 1
过载电流 Overload Current	图2 Graph 2

备注：1、阻性负载类别(L/R<0.1ms)；2、接通和分断转换频率，ON：OFF=1秒：9秒；3、测试环境温度为23±5℃；4、电气寿命是产品带载分断的次数。
Remarks: 1. Resistive load category (L/R<0.1ms); 2. Switching frequency between on and off, ON: OFF=1 sec: 9 sec; 3. The testing environment temperature is 23 ± 5 ℃; 4. The electrical life is the number of times a product breaks under load.

性能参数 Performance Parameter

绝缘电阻 Insulation Resistance	1000MΩ@2500VDC (Initial) ≤50MΩ@1000VDC (End)
介质耐压 Dielectric Withstanding Voltage	AC3500V 1min ≤10mA
动作时间 Operate Time	40ms (Include bounce)
释放时间 Release Time	20ms (Include bounce)
弹跳时间 Bounce Time	5ms
冲击 Shock	20g peak,1/2 sine(Operating)
正弦振动 Sine Vibration	20g peak,80~2000Hz
湿度 Humidity	5%~85%RH
温度 Operating Temperature	-40℃~+85℃
重量 Weight	3.3Kg Approx

备注：1、线圈施加额定工作电压，无续流二极管；2、测试环境温度为20℃。
Remarks: 1. Apply rated working voltage to the coil without a freewheeling diode; 2. The testing environment temperature is 20 ℃.

电气寿命参考曲线-图1
Electrical Life Reference Curve-Graph1

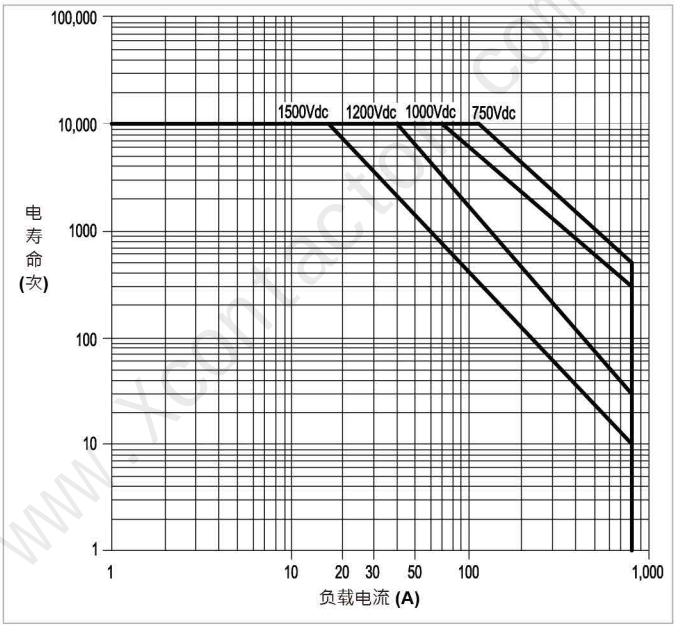

过载电流参考曲线-图2
Overload Current vs Time Reference Curve-Graph2

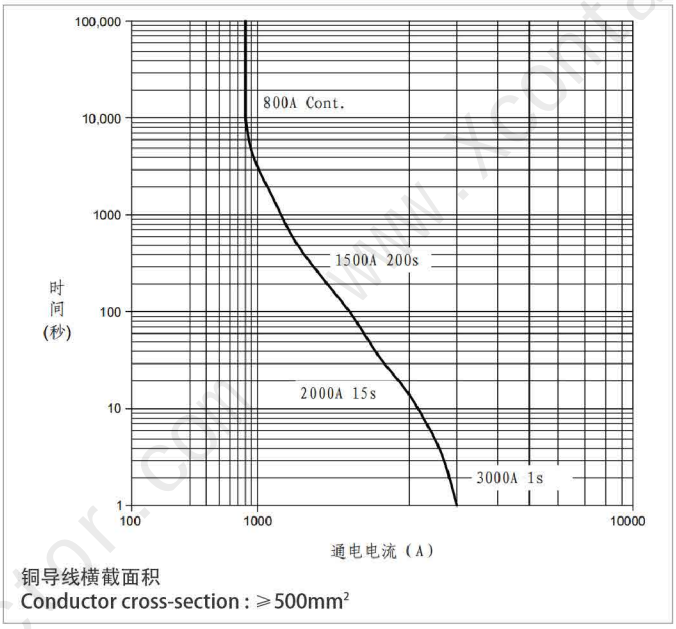

备注：1、以上数据曲线作为设计参考选型，不作为选型熔断器的依据；2、环境温度为23±5℃下。
Remarks: 1. The above data curve is used as a design reference for selection and not as a basis for selecting fuses; 2. At an ambient temperature of 23 ± 5 ℃.

尺寸图&接线原理图 Dimension & Wiring

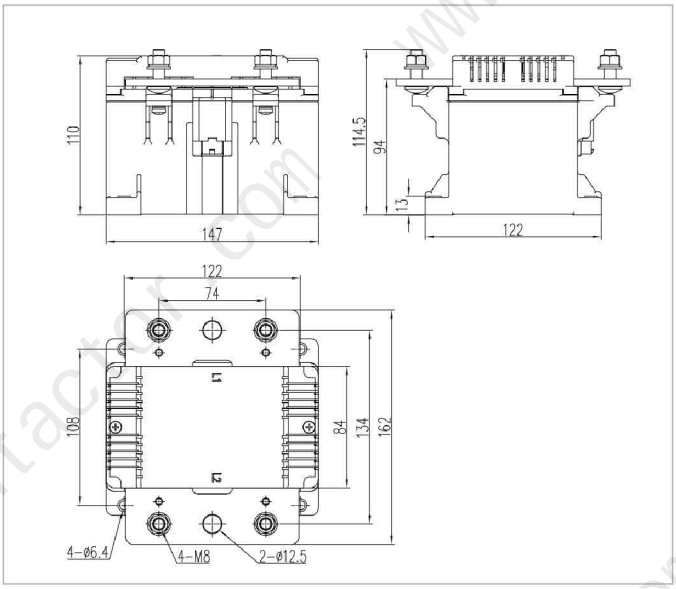

安装紧固件 Fastener	扭力范围 Torque Range	
	主触头接线 Main contacts wiring	底部固定 Product mount
M8 (配套提供 Provided)	9～12N・m	4～6N・m

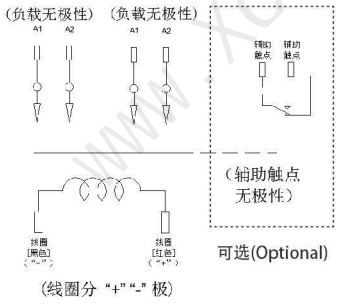

辅助开关 Aux Contact (可选 Optional):
AC-12:125VAC/3A; DC-12:30V/2A;
100mA/8V(最小电流 Current Min)

备注：
1、尺寸单位：mm，视角：⊕-⊳；
2、未注尺寸公差：标称值<10mm为±0.3，标称值10～50mm为±0.6，标称值>50mm为±1.0；

Remarks:
1.Dimension unit: mm, viewing angle: ⊕-⊳；
2. Undeclared dimensional tolerance: ± 0.3 for nominal values<10mm,The nominal value of 10-50mm is ± 0.6,±1.0 for nominal values greater than 50mm;

线束加工图
Wire Harness Processing

导线式 Wire Without Connectors	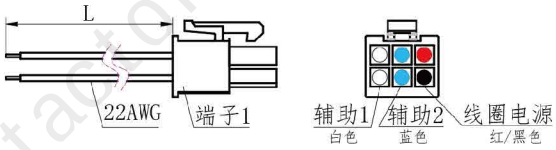	说明： 端子1与接触器的端子端口进行互配；导线的长度(L)提供以下供选择：1000mm(标准线束)、1200mm、1500mm。 Explanation: Terminal 1 is matched with the terminal port of the contactor;the length (L) of the wire provides the following options: 1000mm (standard wiring harness), 1200mm, 1500mm.
导线式+端子 Wire With Connectors	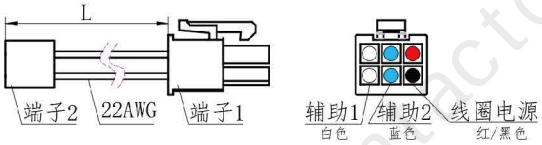	说明： 端子1与接触器的端子口进行互配；端子2与客户产品的端子口进行互配；导线的长度(L)提供以下供选择：1000mm(标准线束)、1200mm、1500mm。 Explanation: Terminal 1 is matched with the terminal port of the contactor; Terminal 2 is matched with the terminal port of the customer's product; The length (L) of the wire provides the following options: 1000mm (standard wiring harness), 1200mm, 1500mm.

订货说明 Ordering Information

EVQ800 E 12 D A 9***

额定电流 Rated Current:
"800" =800A

触点形式 Main contacts feature:
"E" =主触头为一组常开，触头不分极性；1 form A(ON), non-polarized;
"G" =主触头为一组常开，触头不分极性，带一组常开辅助触点；
1 form A(ON) add AUX contacts(ON), non-polarized;

线圈电压 Coil Voltage:
"12" =12VDC
"24" =24VDC

线圈引出方式 Coil lead out:
"D" =导线式，不带连接器；Wire Without Connectors
"E" =导线式，带连接器；Wire With Connectors
(制造商推荐Manufacturer's recommendation)

安装方式 Mounting:
"A" =立式安装
Bottom mount

产品代码
Product code

EVQ1000 Series-9

1000A 直流接触器 DC Contactor

特性 Features

◎ 产品符合欧盟RoHS指令。
The product complies with the EU RoHS directive.

◎ 密封且安全，对安装位置不敏感。
Hermetically sealed and intrinsically safe. Not mounting position sensitive.

◎ 在恶劣环境下，产品触点不会被氧化或污染。
Operates in harsh environments without oxidation or contamination of contacts.

◎ 高压触点间填充有惰性气体。
High voltage isolation between open contacts, inert gas filled contact chamber.

◎ 产品设计与管控符合IATF-16949。
Product design and quality control in accordance to IATF-16949.

◎ 典型应用于车载电池、电机控制器、充电桩、光伏、储能。
Typical applications apply to Battery electric vehicles ,DC motor controller protection,DC charging pile, Photovoltaic controls,Energy Storage systems.

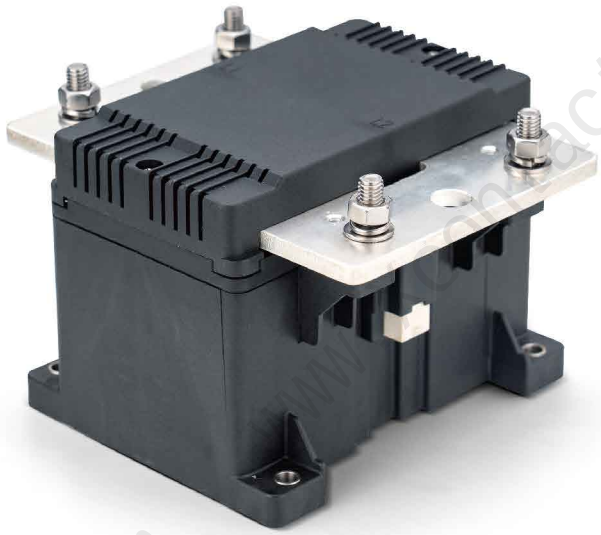

线圈参数 Coil Data

线圈电压 Coil Voltage	动作电压 Pickup Voltage	释放电压 Dropout Voltage	瞬间启动电流 Inrush Current	平均保持电流 Avg. Holding Current	保持功耗 Holding Power
12/24VDC	9VDC Max	<6.5VDC	6.5A	0.4A@12VDC 0.2A@24VDC	5W

备注：1、线圈参数值是环境温度为20℃下的理论值，因线圈电阻的影响以上参数约±10%的变动范围；2、线圈可靠的工作电压范围为85%~110%Us额定电压；3、如需其他额定电压，可特殊订货。
Remarks: 1. The coil parameter values are theoretical values at an ambient temperature of 20 ℃, with a variation range of approximately ± 10% due to the influence of coil resistance; 2. The reliable working voltage range of the coil is 85%~110% of the rated voltage; 3. If other rated voltages are required, special orders can be made.

触点参数 Main Contact

触点形式 Contact Arrangement	1 Form A (SPST-NO)
触点极性 Contact Polarized	无极性 Nonpolarized
接触电阻(初始) Contact Resistance (Initial)	1mΩ (Typical Value)
负载电压 Loda Voltage	12-1500VDC
额定电流 Current (continuous)	1000A
机械寿命 Mechanical Life	2×10^5 cycles
电气寿命 Electrical Life	图1 Graph 1
过载电流 Overload Current	图2 Graph 2

备注：1、阻性负载类别(L/R<0.1ms)；2、接通和分断转换频率，ON : OFF=1秒 : 9秒；3、测试环境温度为23±5℃；4、电气寿命是产品带载分断的次数。
Remarks: 1. Resistive load category (L/R<0.1ms); 2. Switching frequency between on and off, ON: OFF=1 sec: 9 sec; 3. The testing environment temperature is 23 ± 5 ℃; 4. The electrical life is the number of times a product breaks under load.

性能参数 Performance Parameter

绝缘电阻 Insulation Resistance	1000MΩ@2500VDC (Initial) ≤50MΩ@1000VDC (End)
介质耐压 Dielectric Withstanding Voltage	AC3500V 1min ≤10mA
动作时间 Operate Time	40ms (Include bounce)
释放时间 Release Time	20ms (Include bounce)
弹跳时间 Bounce Time	5ms
冲击 Shock	20g peak,1/2 sine(Operating)
正弦振动 Sine Vibration	20g peak,80~2000Hz
湿度 Humidity	5%~85%RH
温度 Operating Temperature	-40℃~+85℃
重量 Weight	3.3Kg Approx

备注：1、线圈施加额定工作电压，无续流二极管；2、测试环境温度为20℃。
Remarks: 1. Apply rated working voltage to the coil without a freewheeling diode; 2. The testing environment temperature is 20 ℃.

电气寿命参考曲线-图1
Electrical Life Reference Curve-Graph1

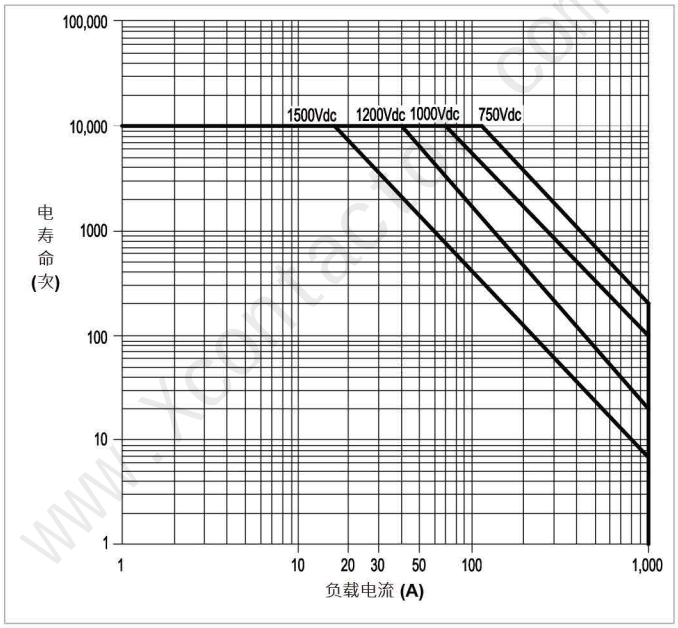

过载电流参考曲线-图2
Overload Current vs Time Reference Curve-Graph2

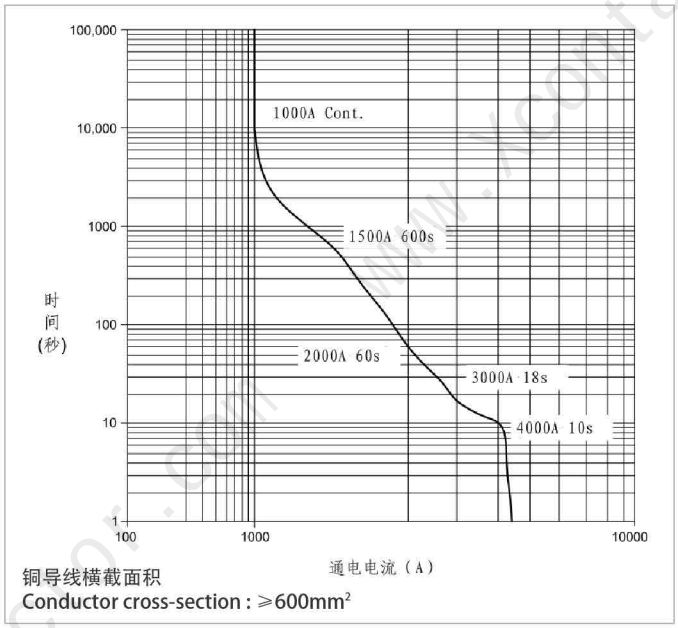

备注：1、以上数据曲线作为设计参考选型，不作为选型熔断器的依据；2、环境温度为23±5℃下。
Remarks: 1. The above data curve is used as a design reference for selection and not as a basis for selecting fuses; 2. At an ambient temperature of 23 ± 5 ℃.

尺寸图&接线原理图 Dimension & Wiring

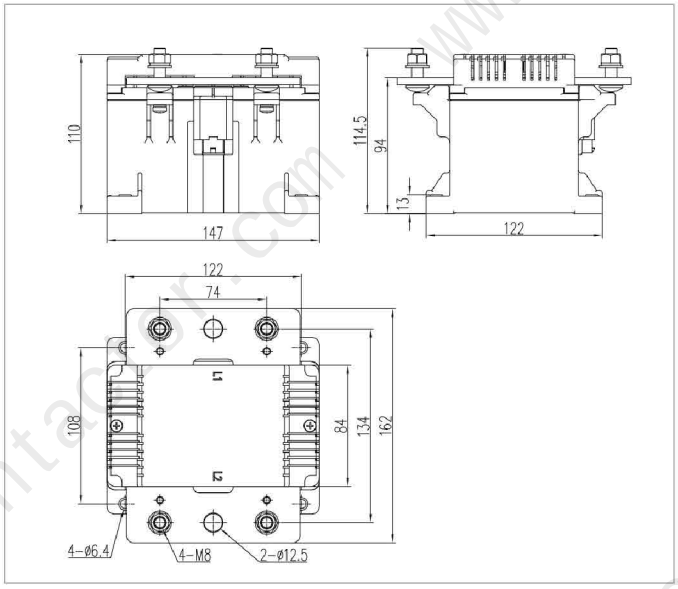

安装紧固件 Fastener	扭力范围 Torque Range	
	主触头接线 Main contacts wiring	底部固定 Product mount
M8 (配套提供 Provided)	9～12N・m	4～6N・m

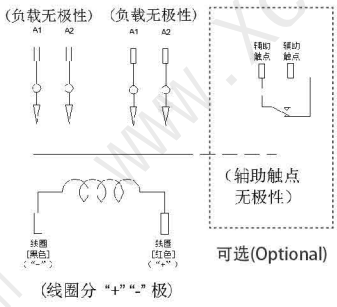

辅助开关 Aux Contact (可选 Optional):
AC-12:125VAC/3A; DC-12:30V/2A;
100mA/8V(最小电流 Current Min)

备注：
1、尺寸单位：mm，视角：⊕-▷；
2、未注尺寸公差：标称值<10mm为±0.3，标称值10～50mm为±0.6，标称值>50mm为±1.0；

Remarks:
1.Dimension unit: mm, viewing angle: ⊕-▷；
2. Undeclared dimensional tolerance: ± 0.3 for nominal values<10mm, The nominal value of 10-50mm is ± 0.6,±1.0 for nominal values greater than 50mm;

线束加工图
Wire Harness Processing

导线式 Wire Without Connectors	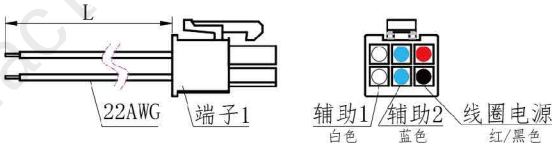	说明： 端子1与接触器的端子端口进行互配；导线的长度(L)提供以下供选择：1000mm(标准线束)、1200mm、1500mm。 Explanation: Terminal 1 is matched with the terminal port of the contactor;the length (L) of the wire provides the following options: 1000mm (standard wiring harness), 1200mm, 1500mm.
导线式+端子 Wire With Connectors	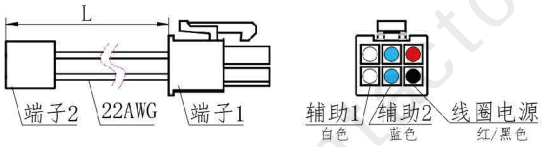	说明： 端子1与接触器的端子口进行互配；端子2与客户产品的端子口进行互配；导线的长度 (L) 提供以下供选择：1000mm(标准线束)、1200mm、1500mm。 Explanation: Terminal 1 is matched with the terminal port of the contactor; Terminal 2 is matched with the terminal port of the customer's product; The length (L) of the wire provides the following options: 1000mm (standard wiring harness), 1200mm, 1500mm.

订货说明 Ordering Information

EVQ1000 E 12 D A 9***

额定电流 Rated Current：
"1000"＝1000A

线圈电压 Coil Voltage：
"12"＝12VDC
"24"＝24VDC

安装方式 Mounting：
"A"＝立式安装
Bottom mount

产品代码
Product code

触点形式 Main contacts feature：
"E"＝主触头为一组常开，触头不分极性；1 form A(ON), non-polarized;
"G"＝主触头为一组常开，触头不分极性，带一组常开辅助触点；
1 form A(ON) add AUX contacts(ON), non-polarized;

线圈引出方式 Coil lead out：
"D"＝导线式，不带连接器；Wire Without Connectors
"E"＝导线式，带连接器；Wire With Connectors
（制造商推荐Manufacturer's recommendation）

常用端子型号

Commonly Used Terminal Models

标准品

编号：10

Molex 母壳 43640-0200(2pin)

长16.89×宽6.85×高3.86mm

标准品

编号：61

Molex 母壳 43020-0400(4pin)

长6.89×宽6.85×高6.85mm

编号：06

JST 母壳 SMR-02V-B(2pin)

长18.2×宽7.5×高8mm

编号：27

JAE 母壳 IL-AG9-2P-S3C1(2pin)

长34.6×宽8.2×高8mm

编号：11

JAE 公壳 IL-AG9-2S-S3C1(2pin)

长24.6×宽6×高8.3mm

编号：02

JST 公壳 SMP-02V-BC(2pin)

长11.7×宽5.5×高7.4mm

编号：32

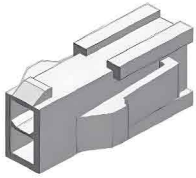

Molex 母壳 3901-2026(2pin)

长23.9×宽13.8×高11.6mm

编号：64

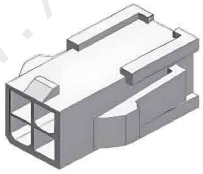

Molex 母壳 39-01-2041(4pin)

长23.9×宽11.6×高18mm

编号：05

住友 母壳 6098-7892(2pin)

长30.1×宽11.4×高12.15mm

编号：01

住友 公壳 6098-7895(2pin)

长18.6×宽8.95×高10.89mm

编号：07

TE 防水母壳 282104-1(2pin)

长42×宽19.8×高13.8mm

编号：41

TE 防水母壳 282106-1(4pin)

长42×宽35×高16mm

产品使用注意事项

Application Notes

1. 凡安装接触器时均要使用防松垫圈以防止螺纹紧固件松脱。拧紧紧固件的扭力范围应在规定的范围内，超出扭力值会损坏产品。
2. 吸合电压、释放电压会随着环境温度和使用条件而发生变化，因此敬请注意。
3. 如果多个接触器安装位置比较近，需要考虑散热和绝缘是否满足。
4. 在超过线圈额定值、触点额定值、寿命等规格范围以外使用，可能会引起异常发热，因此敬请注意。
5. 根据负载电流大小，选择合适的线缆或铜排。接触器连接有高热量器件，如熔断器，分流器等，会影响接触器散热，须根据实际温升选择线缆或铜排。同时结合实际的环境温度评估线缆或铜排的降额系数。
6. 避免把产品安装在强磁场的地方（靠近变压器或磁铁处），或靠近有热辐射的物体。
7. 在接触器坠落的情况下，原则上请不要再使用。
8. 在其最终的击穿模式中，它可能会失去应有的切断功能，因此不要在超过它的分断能力和寿命参数的状态下使用（请将该接触器当作一个有规定寿命的产品来对待，必要时要作替换）。接触器一旦失去分断能力，则有可能会引起其周围零件燃烧，所以要设计好保护线路，确保电源可在1秒钟内被切断。
9. 接触器采用密封结构，内部充有气体，气体的扩散寿命由触点仓内的温度（即环境温度 + 触点通电产生的温升）所决定，因此勿使产品长时间工作在温度范围以外。
10. 如果接触器的线圈和触点连续通以额定电压（或电流），电源被切断后又马上接通，此时由于线圈的温度增加，线圈的电阻会增大，从而使得产品的吸合电压升高，有可能导致超出额定吸合电压与释放电压，在这种情况下，应采取以下措施：如降低负载电流，限制持续通电时间或采用比额定吸合电压高的线圈电压。
11. 主触点的额定参数适用阻性负载，如果采用感性负载（L负载）同时L/R > 1ms时，应为该感性负载并联一个浪涌电流吸收装置，如未采取措施，可能会造成接触器电气寿命缩短、切断不良。
12. 产品线圈的驱动电路功率必须大于产品线圈功率，否则会降低产品的切断能力。
13. 在高温下使用时，会对电气寿命产生影响，因此请在实际条件下进行确认。
14. 在无负载的情况下开闭时，接触电阻可能会上升，因此敬请注意。
15. 要小心不要让杂物和油污沾到主触点处，且外接线线缆或铜排应与产品的主触点可靠接触，否则会造成主触点周边材料烧焦。
16. 使用电容负载(C负载)时，请对电容负载采取预充电等措施，使冲击电流控制在接触器的额定电流以下，如未采取措施，会造成触点粘连。
17. 本公司保留对产品更改的权利，客户在首次下单之前应确认该资料内容，必要时可要求我司进行更新并提供更新后的资料进行确认。

1. When installing contactors, anti loose washers should be used to prevent threaded fasteners from loosening. The torque range of tightening fasteners should be within the specified range, exceeding the torque value will damage the product.
2. The pull-in voltage and release voltage will vary with the ambient temperature and usage conditions, so please pay attention.
3. If multiple contactors are installed in close proximity, it is necessary to consider whether heat dissipation and insulation are sufficient.
4. Using outside the specifications such as coil rating, contact rating, and service life may cause abnormal heating. Therefore, please pay attention.
5. Select appropriate cables or copper bars based on the magnitude of the load current. Contactors are connected to high heat devices, such as fuses, diverters, etc., which can affect the heat dissipation of the contactor. Therefore, cables or copper bars must be selected based on the actual temperature rise. Simultaneously evaluate the derating coefficient of cables or copper bars based on actual environmental temperature.
6. Avoid installing the product in areas with strong magnetic fields (near transformers or magnets), or near objects with thermal radiation.
7. In the event of a contactor falling, in principle, please do not use it again.
8. In its final breakdown mode, it may lose its proper cut-off function, so do not use it in a state that exceeds its breaking capacity and lifespan parameters (please treat the contactor as a product with a specified lifespan and replace it if necessary). Once the contactor loses its breaking ability, it may cause the surrounding parts to burn. Therefore, it is necessary to design a protective circuit to ensure that the power supply can be cut off within 1 second.
9. The contactor adopts a sealed structure, with gas filled inside. The diffusion life of the gas is determined by the temperature inside the contact chamber (i.e. ambient temperature+temperature rise generated by contact electrification), so do not allow the product to work outside the temperature range for a long time.
10. If the coil and contact of the contactor are continuously connected to the rated voltage (or current), and the power is cut off and immediately connected, the resistance of the coil will increase due to the increase in coil temperature, which may lead to an increase in the product's pull-in voltage and release voltage. In this case, the following measures should be taken: such as reducing the load current, Limit the continuous power on time or use a coil voltage higher than the rated pull-in voltage.
11. The rated parameters of the main contact are applicable to resistive loads. If an inductive load (L load) is used and L/R is greater than 1ms, a surge current absorption device should be connected in parallel to the inductive load. If no measures are taken, it may shorten the electrical life of the contactor and cause poor disconnection.
12. The driving circuit power of the product coil must be greater than the power of the product coil, otherwise it will reduce the cutting capacity of the product.
13. When used at high temperatures, it can have an impact on the electrical lifespan, so please confirm under actual conditions.
14. When opening and closing without load, the contact resistance may increase, so please be careful.
15. Be careful not to let debris and oil stains get on the main contact point, and the external wiring cables or copper bars should be in reliable contact with the main contact point of the product, otherwise it may cause the materials around the main contact point to burn.
16. When using capacitive load (C load), please take measures such as pre charging the capacitive load to control the impact current below the rated current of the contactor. If no measures are taken, it may cause contact adhesion.
17. Our company reserves the right to make product changes. Customers should confirm the content of this information before placing their first order. If necessary, we can request updates and provide updated information for confirmation.

安来强科技

苏州安来强电子科技有限公司
Suzhou Anlaiqiang Electronic Technology Co., Ltd

声明:
本产品选型手册仅供客户选型时参考，如有更改，恕不另行通知，产品所有参数以《行业选型手册》为准。接触器在不同应用领域的性能参数要求均有所不同，此手册不能完全描述清楚，因而客户应根据具体的使用条件选择合适的接触器，若有疑问，请与苏州安来强电子科技有限公司联系，以便获得更多技术支持。

Special Claim:
Because the performance is different from each other when it used in different conditions, customer could choose the appropriate product according to the specific using conditions. If there is any queries, please contact ALQ for technical support.