DC HIGH VOLTAGE EV RELAY

EVD10

EVD10

PERFORMANCE

ITEM		PARAMETER			
Contact Arrangement		SPST-NO			
Auxiliary Contact		--			
Voltage Rating		12-200Vdc	12-750Vdc	12-1000Vdc	12-1500Vdc
Current Rating		1-10A			
Current Endurance		10A Cont. ; 50A 10min. ; 100A 180sec. ; 200A 50sec.			
Break Current, Max (only 1 time)		150A 320Vdc			
Contact Resistance (Initial)		≤1mΩ (at 10A)			
Operate Time (at 20°C)		30ms Max.			
Bounce Time (at 20°C)		5ms Max.			
Release Time (at 20°C)		10ms Max.			
Mechanical Life (0.5s:0.5s)		2×10^5 Cycles			
Electrical Life		See graph			
Current-carrying capacity curve		See graph			
Insulation resistance		Initial: 100MΩ 1000Vdc			
		After test: 50MΩ 1000Vdc			
Impulse withstand voltage (initial)	Main contact 1mA/1min.(sea level)	AC 3500Vrms			
	Main contact & coil 1mA/1min.(sea level)	AC 2500Vrms		AC 3500Vrms	
Mechanical performance	Shock	20G peak,11ms 1/2 Sine wave (coil energized)			
	Vibration	20G peak,80-2000Hz,Sine wave (coil energized)			
	Strength	50G acceleration,half sine wave impulse 6ms, 50 times per axis.			
Operating & Storage Condition	Ambient Temperature	-40～+85°C			
	Humidity	5～95% RH.			
Altitude		≤4000m			
Weight		approx. 115g			
Certification		UL、CE、CCC			

COIL DATA

Coil Type	Nominal voltage (at 20°C)	Pick-up voltage (at 20°C)	Drop-out voltage (at 20°C)	Coil resistence (at 20°C)	Holding power (at 20°C)	Coil polarity
Single-coil	12Vdc	≤9Vdc	≥1Vdc	40Ω×(1±7%)	approx. 3.6W	non-polarized
	24Vdc	≤18Vdc	≥2Vdc	152Ω×(1±7%)	approx. 3.8W	non-polarized

Professional Renewable Energy Industry Solution Service Provider
东科 DONGKE

EVD10

DC HIGH VOLTAGE EV RELAY

EVD10

PART CODE

EVD	10	E	12	DA	1
Series	Rate current: "10" =10A	Contact form: "E"=Normally open, Non-polarity;	Coil volatge: "12"= 12V dc "24"= 24V dc	Rated voltage: 12V dc-1000V dc	50A outer casing

DIMENSIONS

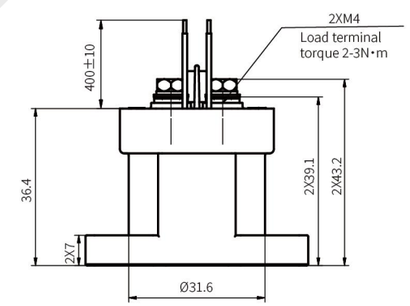

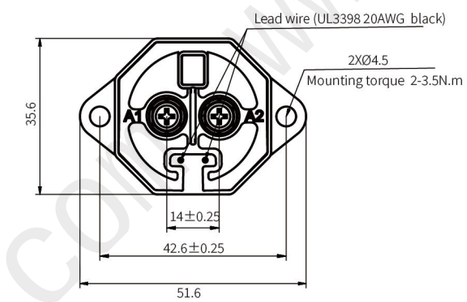

Note: 1.fastener:2xM4x8mm; 2.Mounting hardware M 4, torque 2-3.5N·m;
3.Main contact hardware M 4, torque 2-3N·m; 4.Main contact to copper area≥2mm²;

GRAPHS

■ Make & Break Power Switching Ratings

Make & Break switch (load resistance L/R≤1ms)

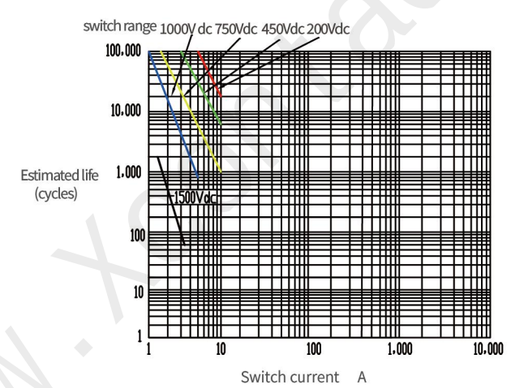

■ Current-carrying capacity curve

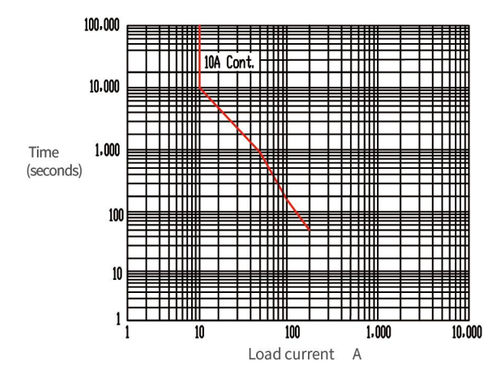

DC HIGH VOLTAGE EV RELAY

EVD20

EVD20

PERFORMANCE

ITEM		PARAMETER			
Contact Arrangement		SPST-NO			
Auxiliary Contact		--			
Voltage Rating		12-200Vdc	12-750Vdc	12-1000Vdc	12-1500Vdc
Current Rating		1-20A			
Current Endurance		20A Cont. ; 50A 10min. ; 100A 180sec. ; 200A 50sec.			
Break Current, Max (only 1 time)		200A 320Vdc			
Contact Resistance (Initial)		≤1mΩ (at 20A)			
Operate Time (at 20°C)		30ms Max.			
Bounce Time (at 20°C)		5ms Max.			
Release Time (at 20°C)		10ms Max.			
Mechanical Life (0.5s:0.5s)		2×10^5 Cycles			
Electrical Life		See graph			
Current-carrying capacity curve		See graph			
Insulation resistance		Initial: 100MΩ 1000Vdc			
		After test: 50MΩ 1000Vdc			
Impulse withstand voltage (initial)	Main contact 1mA/1min.(sea level)	AC 3500Vrms			
	Main contact & coil 1mA/1min.(sea level)	AC 2500Vrms		AC 3500Vrms	
Mechanical performance	Shock	20G peak,11ms 1/2 Sine wave (coil energized)			
	Vibration	20G peak,80-2000Hz,Sine wave (coil energized)			
	Strength	50G acceleration,half sine wave impulse 6ms, 50 times per axis.			
Operating & Storage Condition	Ambient Temperature	-40～+85°C			
	Humidity	5～95% RH.			
Altitude		≤4000m			
Weight		approx. 115g			
Certification		UL、CE、CCC			

COIL DATA

Coil Type	Nominal voltage (at 20°C)	Pick-up voltage (at 20°C)	Drop-out voltage (at 20°C)	Coil resistence (at 20°C)	Holding power (at 20°C)	Coil polarity
Single-coil	12Vdc	≤9Vdc	≥1Vdc	40Ω×(1±7%)	approx. 3.6W	non-polarized
	24Vdc	≤18Vdc	≥2Vdc	152Ω×(1±7%)	approx. 3.8W	non-polarized

Professional Renewable Energy Industry Solution Service Provider
东科 DONGKE

EVD20

DC HIGH VOLTAGE EV RELAY

EVD20

PART CODE

EVD	20	E	12	DA	1
Series	Rate current: "20" =20A	Contact form: "E"=Normally open, Non-polarity;	Coil volatge: "12"= 12V dc "24"= 24V dc	Rated voltage: 12V dc-1000V dc	50A outer casing

DIMENSIONS

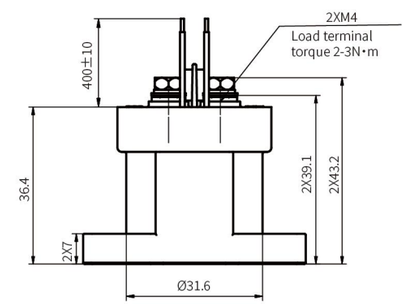

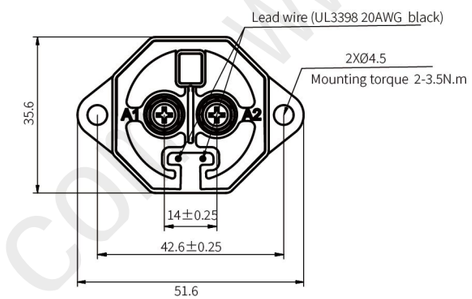

Note: 1.fastener:2xM4x8mm; 2.Mounting hardware M 4, torque 2-3.5N·m;
3.Main contact hardware M 4, torque 2-3N·m; 4.Main contact to copper area≥4mm²;

GRAPHS

■ Make & Break Power Switching Ratings

Make & Break switch (load resistance L/R≤1ms)

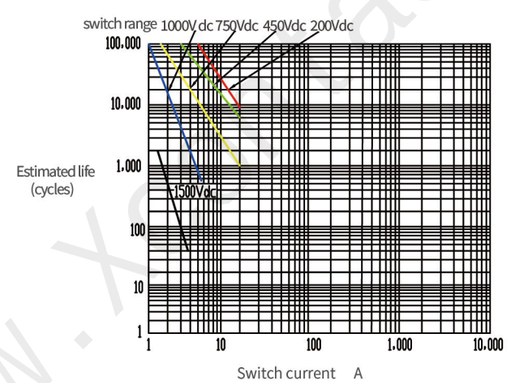

■ Current-carrying capacity curve

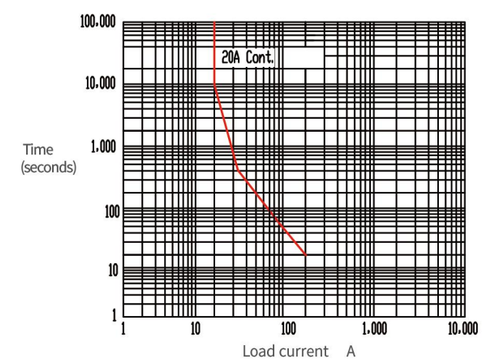

DC HIGH VOLTAGE EV RELAY

EVD30

EVD30

PERFORMANCE

ITEM		PARAMETER			
Contact Arrangement		SPST-NO			
Auxiliary Contact		--			
Voltage Rating		12-200Vdc	12-750Vdc	12-1000Vdc	12-1500Vdc
Current Rating		1-30A			
Current Endurance		30A Cont. ; 100A 10min. ; 150A 180sec. ; 200A 50sec.			
Break Current, Max (only 1 time)		300A 320Vdc			
Contact Resistance (Initial)		≤1mΩ (at 30A)			
Operate Time (at 20°C)		30ms Max.			
Bounce Time (at 20°C)		5ms Max.			
Release Time (at 20°C)		10ms Max.			
Mechanical Life (0.5s:0.5s)		2×10^5 次			
Electrical Life		See graph			
Current-carrying capacity curve		See graph			
Insulation resistance		Initial: 100MΩ 1000Vdc			
		After test: 50MΩ 1000Vdc			
Impulse withstand voltage (initial)	Main contact 1mA/1min.(sea level)	AC 3500Vrms			
	Main contact & coil 1mA/1min.(sea level)	AC 2500Vrms	AC 3500Vrms		
Mechanical performance	Shock	20G peak,11ms 1/2 Sine wave (coil energized)			
	Vibration	20G peak,80-2000Hz,Sine wave (coil energized)			
	Strength	50G acceleration,half sine wave impulse 6ms, 50 times per axis.			
Operating & Storage Condition	Ambient Temperature	-40～+85°C			
	Humidity	5～95% RH.			
Altitude		≤4000m			
Weight		approx. 115g			
Certification		UL、CE、CCC			

COIL DATA

Coil Type	Nominal voltage (at 20°C)	Pick-up voltage (at 20°C)	Drop-out voltage (at 20°C)	Coil resistence (at 20°C)	Holding power (at 20°C)	Coil polarity
Single-coil	12Vdc	≤9Vdc	≥1Vdc	40Ω×(1±7%)	approx. 3.6W	non-polarized
	24Vdc	≤18Vdc	≥2Vdc	152Ω×(1±7%)	approx. 3.8W	non-polarized

Professional Renewable Energy Industry Solution Service Provider
东科 DONGKE

EVD30

DC HIGH VOLTAGE EV RELAY

EVD30

PART CODE

EVD	30	E	12	DA	1
Series	Rate current: "30" =30A	Contact form: "E"=Normally open, Non-polarity;	Coil volatge: "12"= 12V dc "24"= 24V dc	Rated voltage: 12V dc-1000V dc	50A outer casing

DIMENSIONS

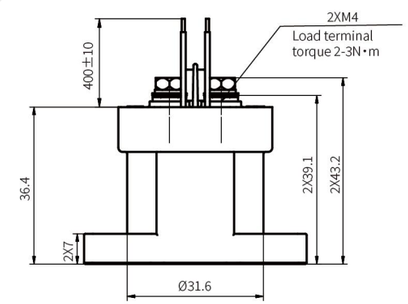

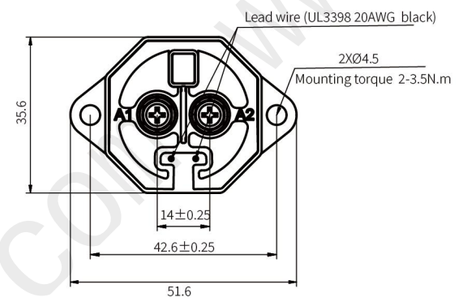

Note: 1.fastener:2xM4x8mm; 2.Mounting hardware M 4, torque 2-3.5N·m;
3.Main contact hardware M 4, torque 2-3N·m; 4.Main contact to copper area≥6mm²;

GRAPHS

■ Make & Break Power Switching Ratings

Make & Break switch (load resistance L/R≤1ms)

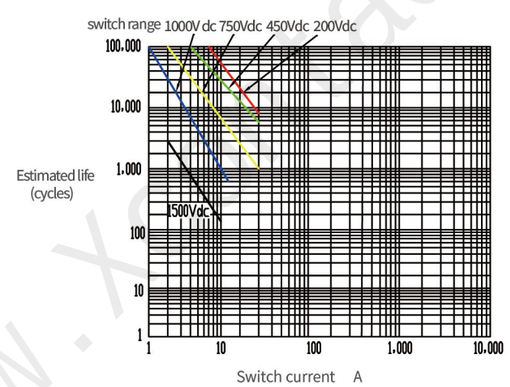

■ Current-carrying capacity curve

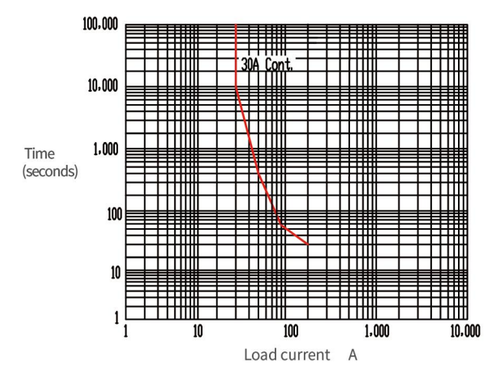

DC HIGH VOLTAGE EV RELAY

EVD50

EVD50

PERFORMANCE

ITEM		PARAMETER			
Contact Arrangement		SPST-NO			
Auxiliary Contact		--			
Voltage Rating		12-200Vdc	12-750Vdc	12-1000Vdc	12-1500Vdc
Current Rating		1-50A			
Current Endurance		50A Cont. ; 100A 10min. ; 150A 180sec. ; 200A 50sec.			
Break Current, Max (only 1 time)		500A 320Vdc			
Contact Resistance (Initial)		≤1mΩ (at 50A)			
Operate Time (at 20°C)		30ms Max.			
Bounce Time (at 20°C)		5ms Max.			
Release Time (at 20°C)		10ms Max.			
Mechanical Life (0.5s:0.5s)		2×10^5 Cycles			
Electrical Life		See graph			
Current-carrying capacity curve		See graph			
Insulation resistance		Initial: 100MΩ 1000Vdc			
		After test: 50MΩ 1000Vdc			
Impulse withstand voltage (initial)	Main contact 1mA/1min.(sea level)	AC 3500Vrms			
	Main contact & coil 1mA/1min.(sea level)	AC 2500Vrms	AC 3500Vrms		
Mechanical performance	Shock	20G peak,11ms 1/2 Sine wave (coil energized)			
	Vibration	20G peak,80-2000Hz,Sine wave (coil energized)			
	Strength	50G acceleration,half sine wave impulse 6ms, 50 times per axis.			
Operating & Storage Condition	Ambient Temperature	-40～+85°C			
	Humidity	5～95% RH.			
Altitude		≤4000m			
Weight		approx. 115g			
Certification		UL、CE、CCC			

COIL DATA

Coil Type	Nominal voltage (at 20°C)	Pick-up voltage (at 20°C)	Drop-out voltage (at 20°C)	Coil resistence (at 20°C)	Holding power (at 20°C)	Coil polarity
Single-coil	12Vdc	≤9Vdc	≥1Vdc	40Ω×(1±7%)	approx. 3.6W	non-polarized
	24Vdc	≤18Vdc	≥2Vdc	152Ω×(1±7%)	approx. 3.8W	non-polarized

Professional Renewable Energy Industry Solution Service Provider
东科 DONGKE

EVD50

DC HIGH VOLTAGE EV RELAY

EVD50

PART CODE

EVD	50	E	12	DA	1
Series	Rate current: "50" =50A	Contact form: "E"=Normally open, Non-polarity;	Coil volatge: "12"= 12V dc "24"= 24V dc	Rated voltage: 12V dc-1000V dc	50A outer casing

DIMENSIONS

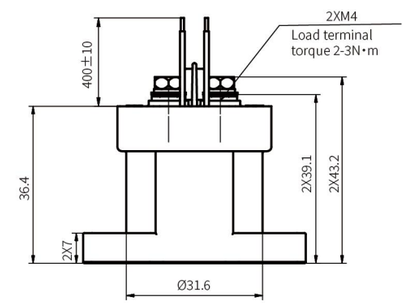

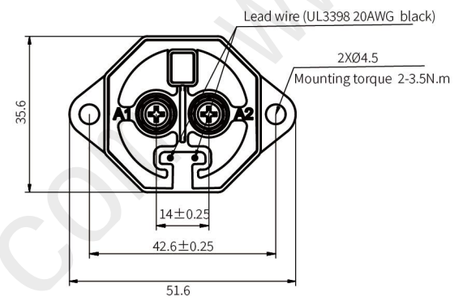

Note: 1.fastener:2xM4x8mm; 2.Mounting hardware M 4, torque 2-3.5N·m;
3.Main contact hardware M 4, torque 2-3N·m; 4.Main contact to copper area≥10mm²;

GRAPHS

■ Make & Break Power Switching Ratings

Make & Break switch (load resistance L/R≤1ms)

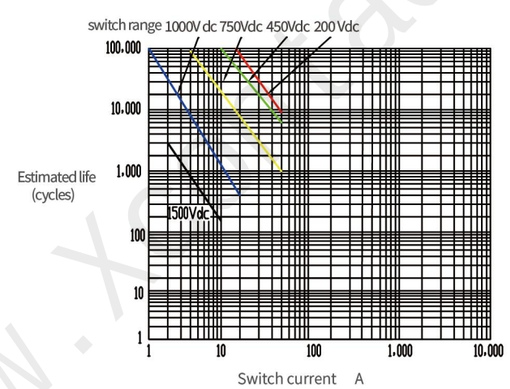

■ Current-carrying capacity curve

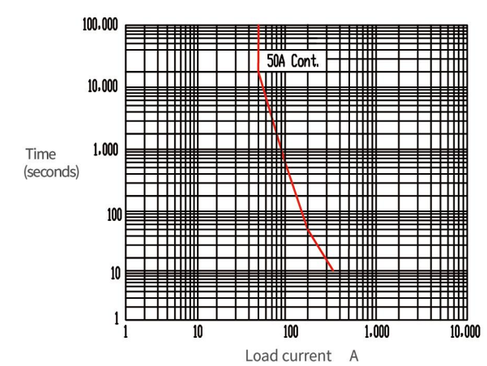

DC HIGH VOLTAGE EV RELAY

EVD50

EVD50

PERFORMANCE

ITEM		PARAMETER			
Contact Arrangement		SPST-NO			
Auxiliary Contact		SPST-NO(Optional)			
		MIN Load：8Vdc 100mA；Contact Resistance：≤100mΩ			
Voltage Rating		12-200Vdc	12-750Vdc	12-1000Vdc	12-1500Vdc
Current Rating		1-50A			
Current Endurance		50A Cont.；100A 10min.；200A 180sec.；300A 50sec.			
Break Current, Max (only 1 time)		1000A 320Vdc			
Contact Resistance (Initial)		≤1mΩ (at 50A)			
Operate Time（at 20°C）		30ms Max.			
Bounce Time（at 20°C）		5ms Max.			
Release Time（at 20°C）		10ms Max.			
Mechanical Life（0.5s:0.5s）		2×10^5 Cycles			
Electrical Life		See graph			
Current-carrying capacity curve		See graph			
Insulation resistance		Initial：100MΩ 1000Vdc			
		After test：50MΩ 1000Vdc			
Impulse withstand voltage (initial)	Main contact 1mA/1min.(sea level)	AC 3500Vrms			
	Main contact & coil 1mA/1min.(sea level)	AC 2500Vrms		AC 3500Vrms	
Mechanical performance	Shock	20G peak,11ms 1/2 Sine wave (coil energized)			
	Vibration	20G peak,80-2000Hz,Sine wave (coil energized)			
	Strength	50G acceleration,half sine wave impulse 6ms, 50 times per axis.			
Operating & Storage Condition	Ambient Temperature	-40～+85°C			
	Humidity	5～95% RH.			
Altitude		≤4000m			
Weight		approx. 160g			
Certification		UL、CE、CCC			

COIL DATA

Coil Type	Nominal voltage (at 20°C)	Pick-up voltage (at 20°C)	Drop-out voltage (at 20°C)	Coil resistence (at 20°C)	Holding power (at 20°C)	Coil polarity
Single-coil	12Vdc	≤9.6Vdc	≥1Vdc	26Ω×(1±7%)	approx. 5.5W	non-polarized
	24Vdc	≤19.2Vdc	≥2Vdc	96Ω×(1±7%)	approx. 6.0W	non-polarized
	48Vdc	≤38.4Vdc	≥4Vdc	392Ω×(1±7%)	approx. 5.9W	non-polarized

EVD50

DC HIGH VOLTAGE EV RELAY

EVD50

PART CODE

EVD	50	G	12	DA	2
Series	Rate current: “50” =50A	Contact form: “G”=normally open,non-polarity,aux.contact “E”=normally open,non-polarity	Coil volatge：“12”=12V dc “24”=24V dc “48”=48V dc	Rated voltage: 12V dc-1000V dc	100 outer Casing

DIMENSIONS

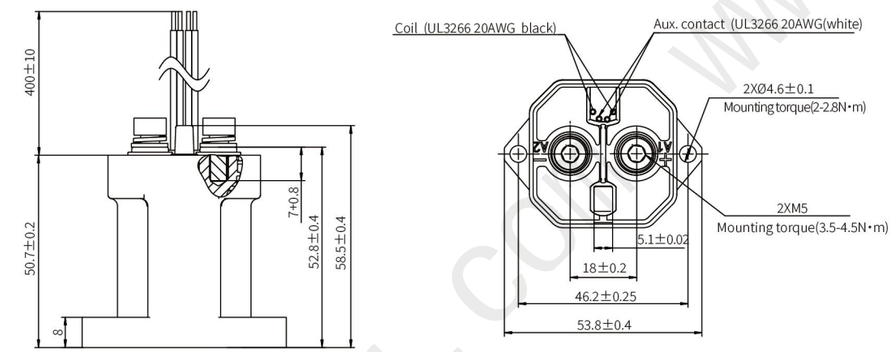

Note: 1.fastener:2xM5x8mm; 2.Mounting hardware M 4, torque 2-2.8N•m;
3.Main contact hardware M 5, torque 3.5-4.5N•m; 4.Main contact to copper area≥10mm²;

GRAPHS

■ Make & Break Power Switching Ratings

Make & Break switch (load resistance L/R≤1ms)

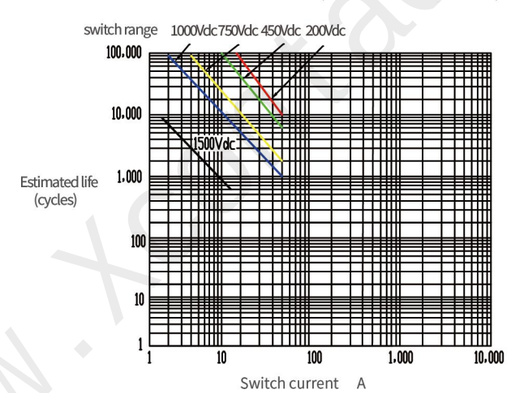

■ Current-carrying capacity curve

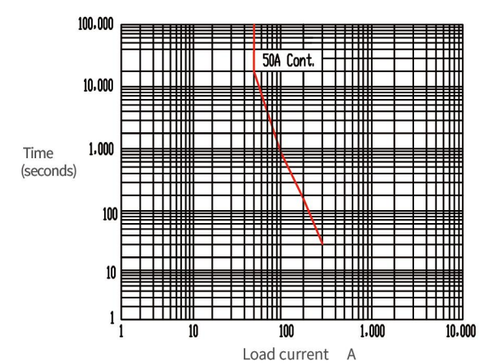

DC HIGH VOLTAGE EV RELAY

EVD100

EVD100

PERFORMANCE

ITEM		PARAMETER			
Contact Arrangement		SPST-NO			
Auxiliary Contact		SPST-NO(Optional)			
		MIN Load：8Vdc 100mA；Contact Resistance：≤100mΩ			
Voltage Rating		12-200Vdc	12-750Vdc	12-1000Vdc	12-1500Vdc
Current Rating		1-100A			
Current Endurance		100A Cont.；150A 10min.；200A 180sec.；300A 50sec.			
Break Current, Max (only 1 time)		1000A 320Vdc			
Contact Resistance (Initial)		≤1mΩ (at 100A)			
Operate Time (at 20°C)		30ms Max.			
Bounce Time (at 20°C)		5ms Max.			
Release Time (at 20°C)		10ms Max.			
Mechanical Life (0.5s:0.5s)		2×10^5 Cycles			
Electrical Life		See graph			
Current-carrying capacity curve		See graph			
Insulation resistance		Initial：100MΩ 1000Vdc			
		After test：50MΩ 1000Vdc			
Impulse withstand voltage (initial)	Main contact 1mA/1min.(sea level)	AC 3500Vrms			
	Main contact & coil 1mA/1min.(sea level)	AC 2500Vrms		AC 3500Vrms	
Mechanical performance	Shock	20G peak,11ms 1/2 Sine wave (coil energized)			
	Vibration	20G peak,80-2000Hz,Sine wave (coil energized)			
	Strength	50G acceleration,half sine wave impulse 6ms, 50 times per axis.			
Operating & Storage Condition	Ambient Temperature	-40～+85°C			
	Humidity	5～95% RH.			
Altitude		≤4000m			
Weight		approx. 160g			
Certification		UL、CE、CCC			

COIL DATA

Coil Type	Nominal voltage (at 20°C)	Pick-up voltage (at 20°C)	Drop-out voltage (at 20°C)	Coil resistence (at 20°C)	Holding power (at 20°C)	Coil polarity
Single-coil	12Vdc	≤9.6Vdc	≥1Vdc	26Ω×(1±7%)	approx. 5.5W	non-polarized
	24Vdc	≤19.2Vdc	≥2Vdc	96Ω×(1±7%)	approx. 6.0W	non-polarized
	48Vdc	≤38.4Vdc	≥4Vdc	392Ω×(1±7%)	approx. 5.9W	non-polarized

Professional Renewable Energy Industry Solution Service Provider
东科 DONGKE

EVD100

DC HIGH VOLTAGE EV RELAY

EVD100

PART CODE

EVD	100	G	12	DA	2
Series	Rate current: “100” =100A	Contact form: “G”=normally open,non-polarity,aux.contact “E”=normally open,non-polarity	Coil volatge： “12”= 12V dc “24”= 24V dc “48”= 48V dc	Rated voltage: 12V dc-1000V dc	100 outer Casing

DIMENSIONS

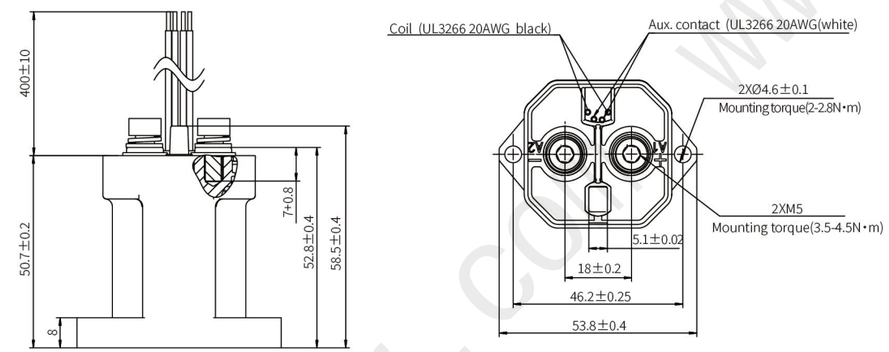

Note: 1.fastener:2xM5x8mm; 2.Mounting hardware M 4, torque 2-2.8N·m;
3.Main contact hardware M 5, torque 3.5-4.5N·m; 4.Main contact to copper area≥35mm²;

GRAPHS

■ Make & Break Power Switching Ratings

Make & Break switch (load resistance L/R≤1ms)

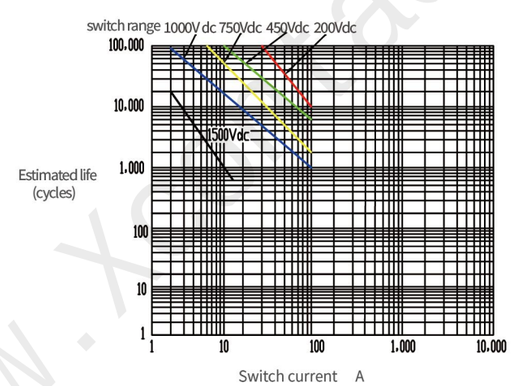

■ Current-carrying capacity curve

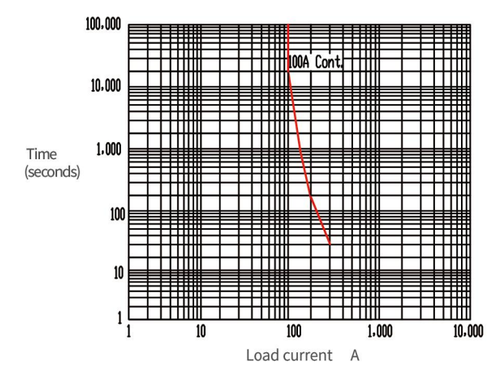

DC HIGH VOLTAGE EV RELAY

EVD150

EVD150

PERFORMANCE

ITEM		PARAMETER			
Contact Arrangement		SPST-NO			
Auxiliary Contact		SPST-NO(Optional)			
		MIN Load：8Vdc 100mA；Contact Resistance：≤100mΩ			
Voltage Rating		12-200Vdc	12-750Vdc	12-1000Vdc	12-1500Vdc
Current Rating		1-150A			
Current Endurance		150A Cont.；180A 10min.；250A 180sec.；300A 50sec.			
Break Current, Max (only 1 time)		1000A 320Vdc			
Contact Resistance (Initial)		≤1mΩ (at 150A)			
Operate Time (at 20°C)		30ms Max.			
Bounce Time (at 20°C)		5ms Max.			
Release Time (at 20°C)		10ms Max.			
Mechanical Life (0.5s:0.5s)		2×10^5 Cycles			
Electrical Life		See graph			
Current-carrying capacity curve		See graph			
Insulation resistance		Initial：100MΩ 1000Vdc			
		After test：50MΩ 1000Vdc			
Impulse withstand voltage (initial)	Main contact 1mA/1min.(sea level)	AC 3500Vrms			
	Main contact & coil 1mA/1min.(sea level)	AC 2500Vrms		AC 3500Vrms	
Mechanical performance	Shock	20G peak,11ms 1/2 Sine wave (coil energized)			
	Vibration	20G peak,80-2000Hz,Sine wave (coil energized)			
	Strength	50G acceleration,half sine wave impulse 6ms, 50 times per axis.			
Operating & Storage Condition	Ambient Temperature	-40～+85°C			
	Humidity	5～95% RH.			
Altitude		≤4000m			
Weight		approx. 160g			
Certification		UL、CE、CCC			

COIL DATA

Coil Type	Nominal voltage (at 20°C)	Pick-up voltage (at 20°C)	Drop-out voltage (at 20°C)	Coil resistence (at 20°C)	Holding power (at 20°C)	Coil polarity
Single-coil	12Vdc	≤9.6Vdc	≥1Vdc	26Ω×(1±7%)	approx. 5.5W	non-polarized
	24Vdc	≤19.2Vdc	≥2Vdc	96Ω×(1±7%)	approx. 6.0W	non-polarized
	48Vdc	≤38.4Vdc	≥4Vdc	392Ω×(1±7%)	approx. 5.9W	non-polarized

Professional Renewable Energy Industry Solution Service Provider
东科 DONGKE

EVD150

DC HIGH VOLTAGE EV RELAY

EVD150

PART CODE

EVD	150	G	12	DA	2
Series	Rate current: “150” =150A	Contact form: “G”=normally open,non-polarity,aux.contact “E”=normally open,non-polarity	Coil volatge： “12”= 12V dc “24”= 24V dc “48”= 48V dc	Rated voltage: 12V dc-1000V dc	100 outer Casing

DIMENSIONS

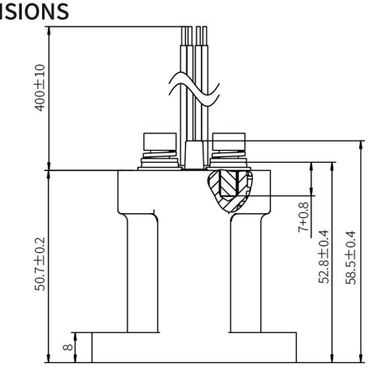

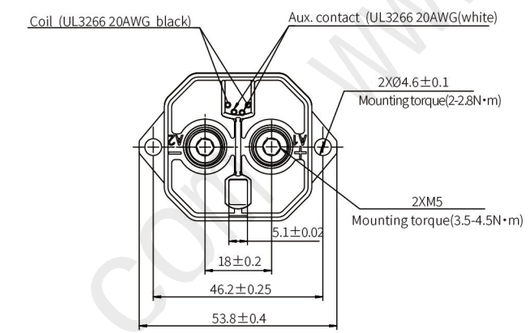

Note: 1.fastener:2xM5x8mm; 2.Mounting hardware M 4, torque 2-2.8N·m;
3.Main contact hardware M 5, torque 3.5-4.5N·m; 4.Main contact to copper area≥60mm²;

GRAPHS

■ Make & Break Power Switching Ratings

Make & Break switch (load resistance L/R≤1ms)

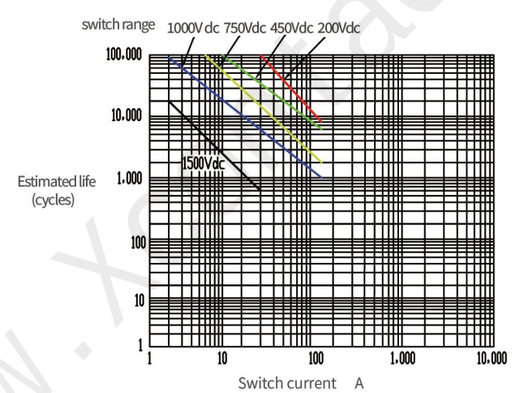

■ Current-carrying capacity curve

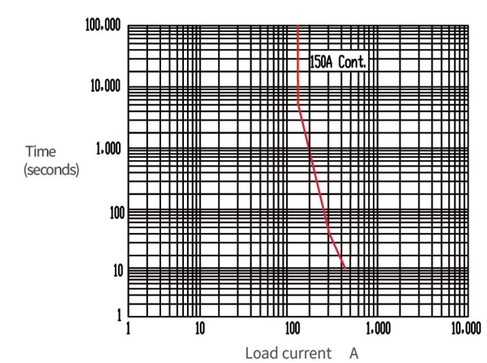

DC HIGH VOLTAGE EV RELAY

EVD50

EVD50

PERFORMANCE

ITEM		PARAMETER			
Contact Arrangement		SPST-NO			
Auxiliary Contact		SPST-NO(Optional)			
		MIN Load：8Vdc 100mA；Contact Resistance：≤100mΩ			
Voltage Rating		12-200Vdc	12-750Vdc	12-1000Vdc	12-1500Vdc
Current Rating		1-50A			
Current Endurance		50A Cont.；100A 10min.；200A 180sec.；300A 50sec.			
Break Current, Max (only 1 time)		1000A 320Vdc			
Contact Resistance (Initial)		≤1mΩ (at 50A)			
Operate Time（at 20°C）		30ms Max.			
Bounce Time（at 20°C）		5ms Max.			
Release Time（at 20°C）		10ms Max.			
Mechanical Life（0.5s:0.5s）		2×10^5 Cycles			
Electrical Life		See graph			
Current-carrying capacity curve		See graph			
Insulation resistance		Initial：100MΩ 1000Vdc			
		After test：50MΩ 1000Vdc			
Impulse withstand voltage (initial)	Main contact 1mA/1min.(sea level)	AC 3500Vrms			
	Main contact & coil 1mA/1min.(sea level)	AC 2500Vrms		AC 3500Vrms	
Mechanical performance	Shock	20G peak,11ms 1/2 Sine wave (coil energized)			
	Vibration	20G peak,80-2000Hz,Sine wave (coil energized)			
	Strength	50G acceleration,half sine wave impulse 6ms, 50 times per axis.			
Operating & Storage Condition	Ambient Temperature	-40～+85°C			
	Humidity	5～95% RH.			
Altitude		≤4000m			
Weight		approx. 160g			
Certification		UL、CE、CCC			

COIL DATA

Coil Type	Nominal voltage (at 20°C)	Pick-up voltage (at 20°C)	Drop-out voltage (at 20°C)	Coil resistence (at 20°C)	Holding power (at 20°C)	Coil polarity
Single-coil	12Vdc	≤9.6Vdc	≥1Vdc	26Ω×(1±7%)	approx. 5.5W	non-polarized
	24Vdc	≤19.2Vdc	≥2Vdc	96Ω×(1±7%)	approx. 6.0W	non-polarized
	48Vdc	≤38.4Vdc	≥4Vdc	392Ω×(1±7%)	approx. 5.9W	non-polarized

EVD50

DC HIGH VOLTAGE EV RELAY

EVD50

PART CODE

EVD	50	G	12	DA	2
Series	Rate current: “50” =50A	Contact form: “G”=normally open,non-polarity,aux.contact “E”=normally open,non-polarity	Coil volatge：“12”=12V dc “24”=24V dc “48”=48V dc	Rated voltage: 12V dc-1000V dc	100 outer Casing

DIMENSIONS

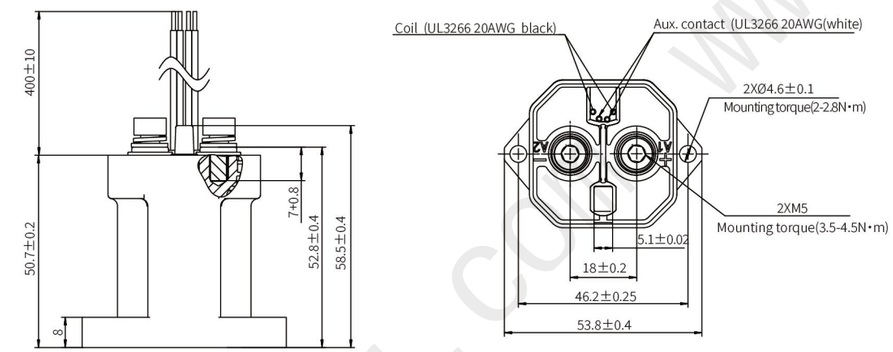

Note: 1.fastener:2xM5x8mm; 2.Mounting hardware M 4, torque 2-2.8N•m;
3.Main contact hardware M 5, torque 3.5-4.5N•m; 4.Main contact to copper area≥10mm²;

GRAPHS

■ Make & Break Power Switching Ratings

Make & Break switch (load resistance L/R≤1ms)

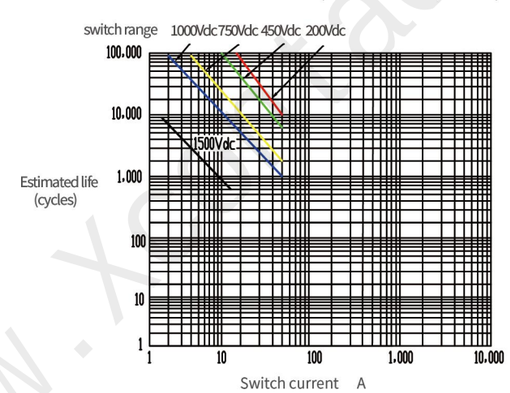

■ Current-carrying capacity curve

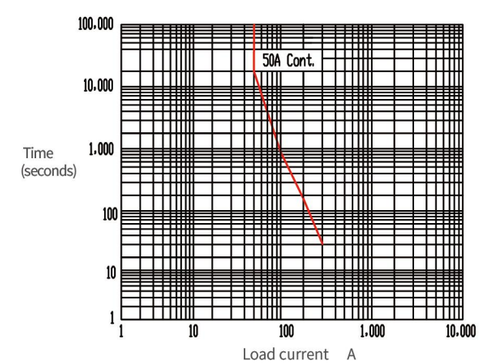

DC HIGH VOLTAGE EV RELAY

EVD100

EVD100

PERFORMANCE

ITEM		PARAMETER			
Contact Arrangement		SPST-NO			
Auxiliary Contact		SPST-NO(Optional)			
		MIN Load：8Vdc 100mA；Contact Resistance：≤100mΩ			
Voltage Rating		12-200Vdc	12-750Vdc	12-1000Vdc	12-1500Vdc
Current Rating		1-100A			
Current Endurance		100A Cont.；150A 10min.；200A 180sec.；300A 50sec.			
Break Current, Max (only 1 time)		1000A 320Vdc			
Contact Resistance (Initial)		≤1mΩ (at 100A)			
Operate Time (at 20°C)		30ms Max.			
Bounce Time (at 20°C)		5ms Max.			
Release Time (at 20°C)		10ms Max.			
Mechanical Life (0.5s:0.5s)		2×10^5 Cycles			
Electrical Life		See graph			
Current-carrying capacity curve		See graph			
Insulation resistance		Initial：100MΩ 1000Vdc			
		After test：50MΩ 1000Vdc			
Impulse withstand voltage (initial)	Main contact 1mA/1min.(sea level)	AC 3500Vrms			
	Main contact & coil 1mA/1min.(sea level)	AC 2500Vrms		AC 3500Vrms	
Mechanical performance	Shock	20G peak,11ms 1/2 Sine wave (coil energized)			
	Vibration	20G peak,80-2000Hz,Sine wave (coil energized)			
	Strength	50G acceleration,half sine wave impulse 6ms, 50 times per axis.			
Operating & Storage Condition	Ambient Temperature	-40～+85°C			
	Humidity	5～95% RH.			
Altitude		≤4000m			
Weight		approx. 160g			
Certification		UL、CE、CCC			

COIL DATA

Coil Type	Nominal voltage (at 20°C)	Pick-up voltage (at 20°C)	Drop-out voltage (at 20°C)	Coil resistence (at 20°C)	Holding power (at 20°C)	Coil polarity
Single-coil	12Vdc	≤9.6Vdc	≥1Vdc	26Ω×(1±7%)	approx. 5.5W	non-polarized
	24Vdc	≤19.2Vdc	≥2Vdc	96Ω×(1±7%)	approx. 6.0W	non-polarized
	48Vdc	≤38.4Vdc	≥4Vdc	392Ω×(1±7%)	approx. 5.9W	non-polarized

Professional Renewable Energy Industry Solution Service Provider
东科 DONGKE

EVD100

DC HIGH VOLTAGE EV RELAY

EVD100

PART CODE

EVD	100	G	12	DA	2
Series	Rate current: “100” =100A	Contact form: “G”=normally open,non-polarity,aux.contact “E”=normally open,non-polarity	Coil volatge： “12”= 12V dc “24”= 24V dc “48”= 48V dc	Rated voltage: 12V dc-1000V dc	100 outer Casing

DIMENSIONS

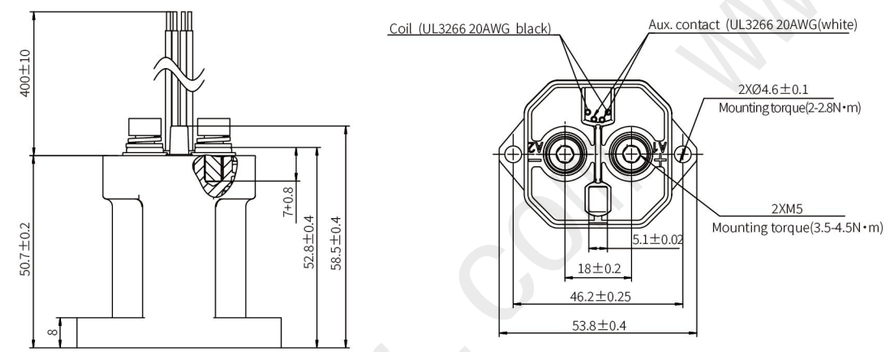

Note: 1.fastener:2xM5x8mm; 2.Mounting hardware M 4, torque 2-2.8N·m;
3.Main contact hardware M 5, torque 3.5-4.5N·m; 4.Main contact to copper area≥35mm²;

GRAPHS

■ Make & Break Power Switching Ratings

Make & Break switch (load resistance L/R≤1ms)

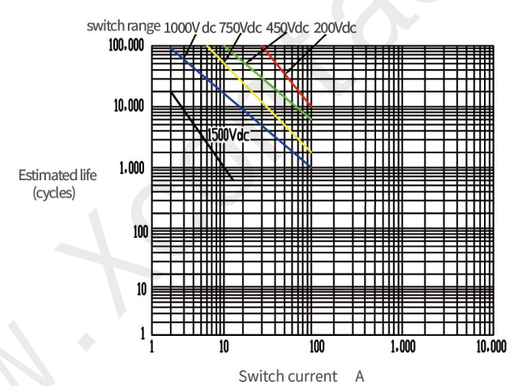

■ Current-carrying capacity curve

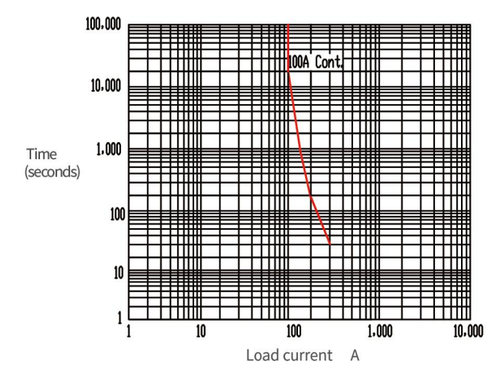

DC HIGH VOLTAGE EV RELAY

EVD150

EVD150

PERFORMANCE

ITEM		PARAMETER			
Contact Arrangement		SPST-NO			
Auxiliary Contact		SPST-NO(Optional)			
		MIN Load：8Vdc 100mA；Contact Resistance：≤100mΩ			
Voltage Rating		12-200Vdc	12-750Vdc	12-1000Vdc	12-1500Vdc
Current Rating		1-150A			
Current Endurance		150A Cont.；180A 10min.；250A 180sec.；300A 50sec.			
Break Current, Max (only 1 time)		1000A 320Vdc			
Contact Resistance (Initial)		≤1mΩ (at 150A)			
Operate Time (at 20°C)		30ms Max.			
Bounce Time (at 20°C)		5ms Max.			
Release Time (at 20°C)		10ms Max.			
Mechanical Life (0.5s:0.5s)		2×10^5 Cycles			
Electrical Life		See graph			
Current-carrying capacity curve		See graph			
Insulation resistance		Initial：100MΩ 1000Vdc			
		After test：50MΩ 1000Vdc			
Impulse withstand voltage (initial)	Main contact 1mA/1min.(sea level)	AC 3500Vrms			
	Main contact & coil 1mA/1min.(sea level)	AC 2500Vrms		AC 3500Vrms	
Mechanical performance	Shock	20G peak,11ms 1/2 Sine wave (coil energized)			
	Vibration	20G peak,80-2000Hz,Sine wave (coil energized)			
	Strength	50G acceleration,half sine wave impulse 6ms, 50 times per axis.			
Operating & Storage Condition	Ambient Temperature	-40～+85°C			
	Humidity	5～95% RH.			
Altitude		≤4000m			
Weight		approx. 160g			
Certification		UL、CE、CCC			

COIL DATA

Coil Type	Nominal voltage (at 20°C)	Pick-up voltage (at 20°C)	Drop-out voltage (at 20°C)	Coil resistence (at 20°C)	Holding power (at 20°C)	Coil polarity
Single-coil	12Vdc	≤9.6Vdc	≥1Vdc	26Ω×(1±7%)	approx. 5.5W	non-polarized
	24Vdc	≤19.2Vdc	≥2Vdc	96Ω×(1±7%)	approx. 6.0W	non-polarized
	48Vdc	≤38.4Vdc	≥4Vdc	392Ω×(1±7%)	approx. 5.9W	non-polarized

Professional Renewable Energy Industry Solution Service Provider
东科 DONGKE

EVD150

DC HIGH VOLTAGE EV RELAY

EVD150

PART CODE

EVD	150	G	12	DA	2
Series	Rate current: “150” =150A	Contact form: “G”=normally open,non-polarity,aux.contact “E”=normally open,non-polarity	Coil volatge： “12”= 12V dc “24”= 24V dc “48”= 48V dc	Rated voltage: 12V dc-1000V dc	100 outer Casing

DIMENSIONS

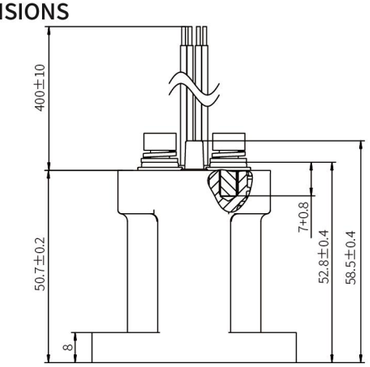

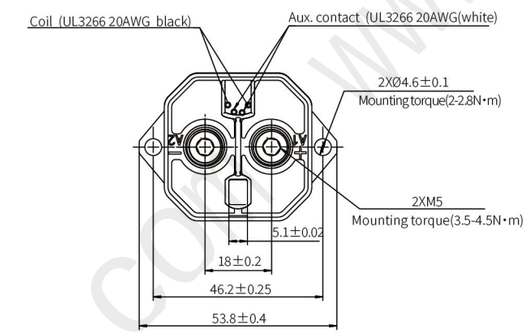

Note: 1.fastener:2xM5x8mm; 2.Mounting hardware M 4, torque 2-2.8N·m;
3.Main contact hardware M 5, torque 3.5-4.5N·m; 4.Main contact to copper area≥60mm²;

GRAPHS

■ Make & Break Power Switching Ratings

Make & Break switch (load resistance L/R≤1ms)

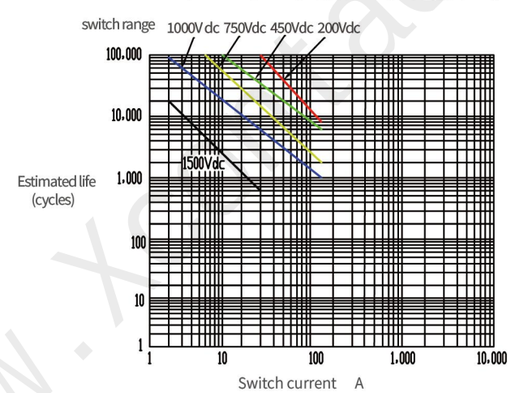

■ Current-carrying capacity curve

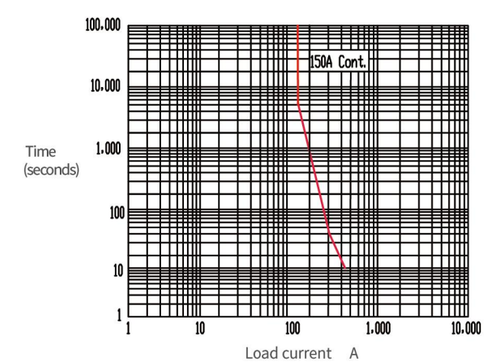

DC HIGH VOLTAGE EV RELAY

EVD150

PERFORMANCE

ITEM		PARAMETER			
Contact Arrangement		SPST-NO			
Auxiliary Contact		SPST-NO(Optional)			
		MIN Load：8Vdc 100mA；Contact Resistance：≤100mΩ			
Voltage Rating		12-200Vdc	12-750Vdc	12-1000Vdc	12-1500Vdc
Current Rating		1-150A			
Current Endurance		150A Cont.；200A 10min.；300A 180sec.；400A 30sec.			
Break Current, Max (only 1 time)		1500A 320Vdc			
Contact Resistance (Initial)		≤1mΩ (at 150A)			
Operate Time（at 20°C）		30ms Max.			
Bounce Time（at 20°C）		5ms Max.			
Release Time（at 20°C）		10ms Max.			
Mechanical Life（0.5s:0.5s）		2×10^5 Cycles			
Electrical Life		See graph			
Current-carrying capacity curve		See graph			
Insulation resistance		Initial：100MΩ 1000Vdc			
		After test：50MΩ 1000Vdc			
Impulse withstand voltage (initial)	Main contact 1mA/1min.(sea level)	AC 3500Vrms			
	Main contact & coil 1mA/1min.(sea level)	AC 2500Vrms	AC 3500Vrms		
Mechanical performance	Shock	20G peak,11ms 1/2 Sine wave (coil energized)			
	Vibration	20G peak,80-2000Hz,Sine wave (coil energized)			
	Strength	50G acceleration,half sine wave impulse 6ms, 50 times per axis.			
Operating & Storage Condition	Ambient Temperature	-40～+85°C			
	Humidity	5～95% RH.			
Altitude		≤4000m			
Weight		approx. 430g			
Certification		UL、CE、CCC			

COIL DATA

Coil Type	Nominal voltage (at 20°C)	Pick-up voltage (at 20°C)	Drop-out voltage (at 20°C)	Start-up current	Holding power (at 20°C)	Coil polarity
PWM	12-36Vdc	≤9Vdc	≥6Vdc	3.2A MAX	approx. 2.5W	non-polarized

Coil Type	Nominal voltage (at 20°C)	Pick-up voltage (at 20°C)	Drop-out voltage (at 20°C)	Coil resistence (at 20°C)	Holding power (at 20°C)	Coil polarity
Single-coil	12Vdc	≤9.6Vdc	≥1Vdc	25Ω×(1±7%)	approx. 5.76W	non-polarized
	24Vdc	≤19.2Vdc	≥2Vdc	100Ω×(1±7%)	approx. 5.76W	non-polarized
	48Vdc	≤38.4Vdc	≥4Vdc	400Ω×(1±7%)	approx. 5.76W	non-polarized

EVD150
DC HIGH VOLTAGE EV RELAY
EVD150

PART CODE

EVD	150	G	1	DA	4
Series	Rate current: “150” =150A	Contact form: “G”=normally open,non-polarity,aux.contact “E”=normally open,non-polarity	Coil volatge: “1”= 9-36V dc “12”= 12V dc “24”= 24V dc “48”= 48V dc	Rated voltage: 12V dc-1000V dc	300 outer Casing

DIMENSIONS

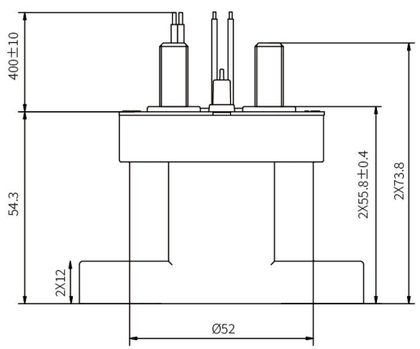

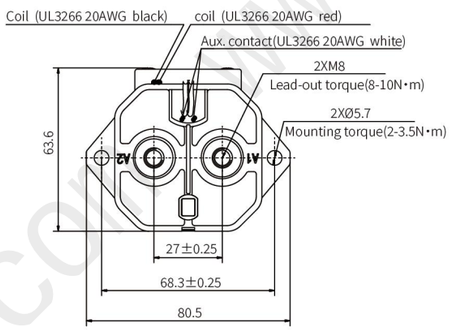

Note: 1.fastener:2xM8x8mm; 2.Mounting hardware M 5, torque 2-3.5N·m;
3.Main contact hardware M 8, torque 8-10N·m; 4.Main contact to copper area≥60mm²;

GRAPHS

■ Make & Break Power Switching Ratings

Make & Break switch (load resistance L/R≤1ms)

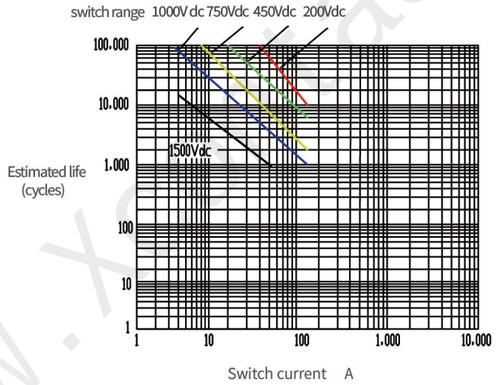

■ Current-carrying capacity curve

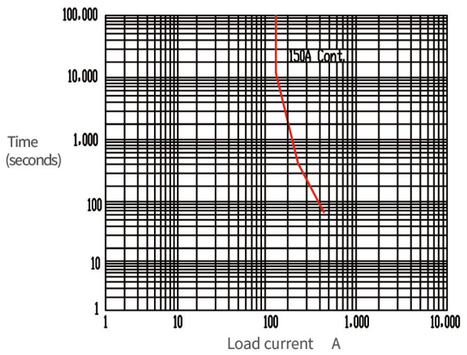

DC HIGH VOLTAGE EV RELAY

EVD200

EVD200

PERFORMANCE

ITEM		PARAMETER			
Contact Arrangement		SPST-NO			
Auxiliary Contact		SPST-NO(Optional)			
		MIN Load：8Vdc 100mA；Contact Resistance：≤100mΩ			
Voltage Rating		12-200Vdc	12-750Vdc	12-1000Vdc	12-1500Vdc
Current Rating		1-200A			
Current Endurance		200A Cont.；300A 10min.；400A 180sec.；500A 30sec.			
Break Current, Max (only 1 time)		2000A 320Vdc			
Contact Resistance (Initial)		≤1mΩ (at 200A)			
Operate Time（at 20°C）		30ms Max.			
Bounce Time（at 20°C）		5ms Max.			
Release Time（at 20°C）		10ms Max.			
Mechanical Life（0.5s:0.5s）		2×10^5 Cycles			
Electrical Life		See graph			
Current-carrying capacity curve		See graph			
Insulation resistance		Initial：100MΩ 1000Vdc			
		After test：50MΩ 1000Vdc			
Impulse withstand voltage (initial)	Main contact 1mA/1min.(sea level)	AC 3500Vrms			
	Main contact & coil 1mA/1min.(sea level)	AC 2500Vrms	AC 3500Vrms		
Mechanical performance	Shock	20G peak,11ms 1/2 Sine wave (coil energized)			
	Vibration	20G peak,80-2000Hz,Sine wave (coil energized)			
	Strength	50G acceleration,half sine wave impulse 6ms, 50 times per axis.			
Operating & Storage Condition	Ambient Temperature	-40～+85°C			
	Humidity	5～95% RH.			
Altitude		≤4000m			
Weight		approx. 430g			
Certification		UL、CE、CCC			

COIL DATA

Coil Type	Nominal voltage (at 20°C)	Pick-up voltage (at 20°C)	Drop-out voltage (at 20°C)	Start-up current	Holding power (at 20°C)	Coil polarity
PWM	12-36Vdc	≤9Vdc	≥6Vdc	3.2A MAX	approx. 2.5W	non-polarized

Coil Type	Nominal voltage (at 20°C)	Pick-up voltage (at 20°C)	Drop-out voltage (at 20°C)	Coil resistence (at 20°C)	Holding power (at 20°C)	Coil polarity
Single-coil	12Vdc	≤9.6Vdc	≥1Vdc	25Ω×(1±7%)	approx. 5.76W	non-polarized
	24Vdc	≤19.2Vdc	≥2Vdc	100Ω×(1±7%)	approx. 5.76W	non-polarized
	48Vdc	≤38.4Vdc	≥4Vdc	400Ω×(1±7%)	approx. 5.76W	non-polarized

EVD200

DC HIGH VOLTAGE EV RELAY

EVD200

PART CODE

EVD	200	G	1	DA	4
Series	Rate current: “200” =200A	Contact form: “G”=normally open,non-polarity,aux.contact “E”=normally open,non-polarity	Coil volatge: “1”= 9-36V dc “12”= 12V dc “24”= 24V dc “48”= 48V dc	Rated voltage: 12V dc-1000V dc	300 outer Casing

DIMENSIONS

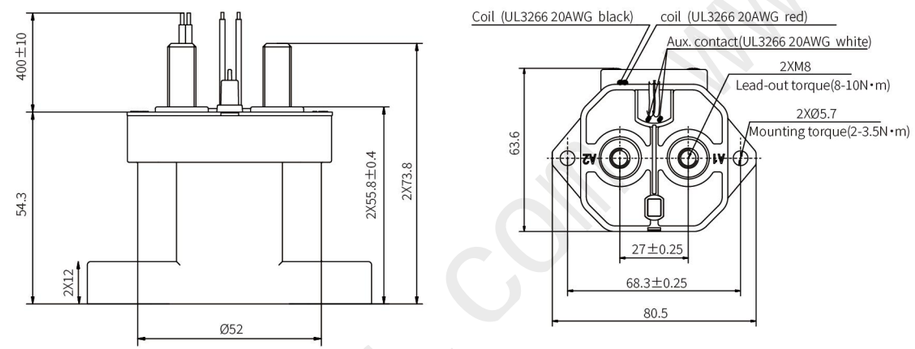

Note: 1.fastener:2xM8x8mm; 2.Mounting hardware M 5, torque 2-3.5N•m;
3.Main contact hardware M 8, torque 8-10N•m; 4.Main contact to copper area≥75mm²;

GRAPHS

■ Make & Break Power Switching Ratings

Make & Break switch (load resistance L/R≤1ms)

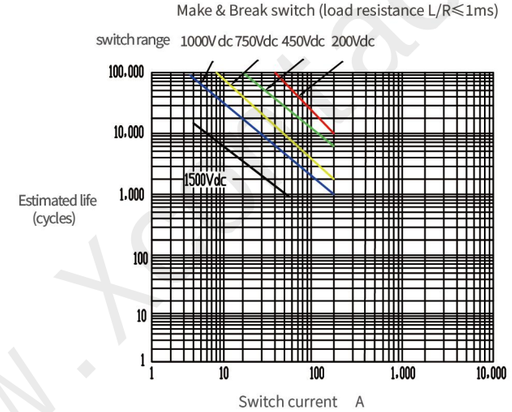

■ Current-carrying capacity curve

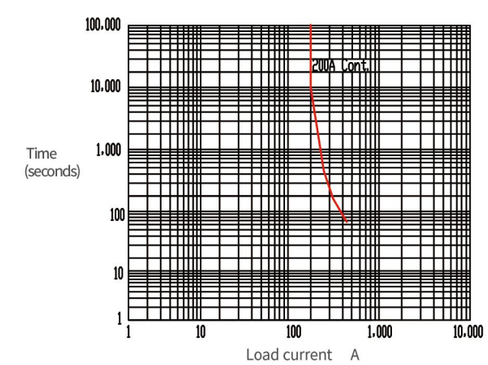

DC HIGH VOLTAGE EV RELAY

EVD250

EVD250

PERFORMANCE

ITEM		PARAMETER			
Contact Arrangement		SPST-NO			
Auxiliary Contact		SPST-NO(Optional)			
		MIN Load：8Vdc 100mA；Contact Resistance：≤100mΩ			
Voltage Rating		12-200Vdc	12-750Vdc	12-1000Vdc	12-1500Vdc
Current Rating		1-250A			
Current Endurance		250A Cont.；300A 10min.；400A 180sec.；500A 30sec.			
Break Current, Max (only 1 time)		2000A 320Vdc			
Contact Resistance (Initial)		≤1mΩ (at 250A)			
Operate Time（at 20°C）		30ms Max.			
Bounce Time（at 20°C）		5ms Max.			
Release Time（at 20°C）		10ms Max.			
Mechanical Life（0.5s:0.5s）		2×10^5 Cycles			
Electrical Life		See graph			
Current-carrying capacity curve		See graph			
Insulation resistance		Initial：100MΩ 1000Vdc			
		After test：50MΩ 1000Vdc			
Impulse withstand voltage (initial)	Main contact 1mA/1min.(sea level)	AC 3500Vrms			
	Main contact & coil 1mA/1min.(sea level)	AC 2500Vrms		AC 3500Vrms	
Mechanical performance	Shock	20G peak,11ms 1/2 Sine wave (coil energized)			
	Vibration	20G peak,80-2000Hz,Sine wave (coil energized)			
	Strength	50G acceleration,half sine wave impulse 6ms, 50 times per axis.			
Operating & Storage Condition	Ambient Temperature	-40～+85°C			
	Humidity	5～95% RH.			
Altitude		≤4000m			
Weight		approx. 430g			
Certification		UL、CE、CCC			

COIL DATA

Coil Type	Nominal voltage (at 20°C)	Pick-up voltage (at 20°C)	Drop-out voltage (at 20°C)	Start-up current	Holding power (at 20°C)	Coil polarity
PWM	12-36Vdc	≤9Vdc	≥6Vdc	3.2A MAX	approx. 2.5W	non-polarized

Coil Type	Nominal voltage (at 20°C)	Pick-up voltage (at 20°C)	Drop-out voltage (at 20°C)	Coil resistence (at 20°C)	Holding power (at 20°C)	Coil polarity
Single-coil	12Vdc	≤9.6Vdc	≥1Vdc	25Ω×(1±7%)	approx. 5.76W	non-polarized
	24Vdc	≤19.2Vdc	≥2Vdc	100Ω×(1±7%)	approx. 5.76W	non-polarized
	48Vdc	≤38.4Vdc	≥4Vdc	400Ω×(1±7%)	approx. 5.76W	non-polarized

EVD250

DC HIGH VOLTAGE EV RELAY

EVD250

PART CODE

EVD	250	G	1	DA	4
Series	Rate current: “250” =250A	Contact form: “G”=normally open,non-polarity,aux.contact “E”=normally open,non-polarity;	Coil volatge: “1”= 9-36V dc “12”= 12V dc “24”= 24V dc “48”= 48V dc	Rated voltage: 12V dc-1000V dc	300 outer Casing

DIMENSIONS

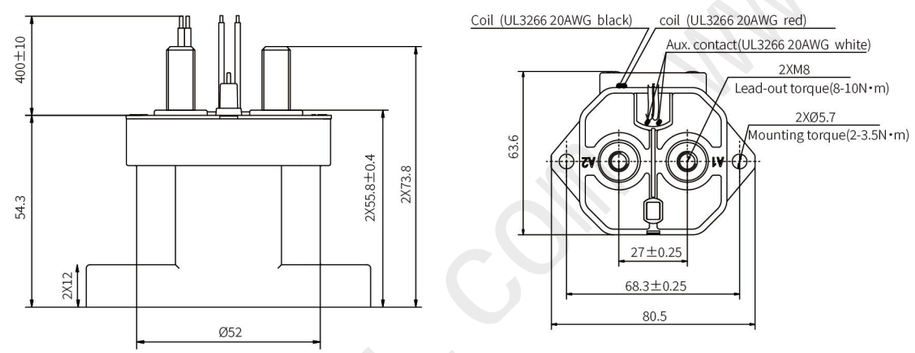

Note: 1.fastener:2xM8x8mm; 2.Mounting hardware M 5, torque 2-3.5N·m;
3.Main contact hardware M 8, torque 8-10N·m; 4.Main contact to copper area≥100mm²;

GRAPHS

■ Make & Break Power Switching Ratings

Make & Break switch (load resistance L/R≤1ms)

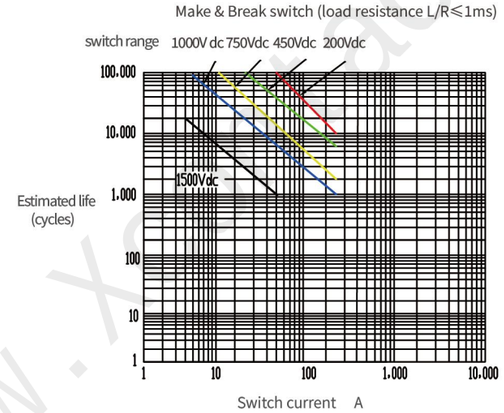

■ Current-carrying capacity curve

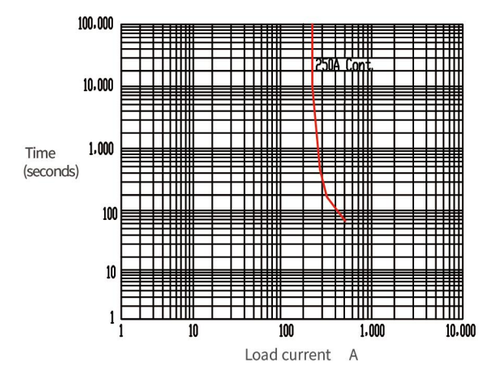

DC HIGH VOLTAGE EV RELAY

EVD300

EVD300

PERFORMANCE

ITEM		PARAMETER			
Contact Arrangement		SPST-NO			
Auxiliary Contact		SPST-NO(Optional)			
		MIN Load：8Vdc 100mA；Contact Resistance：≤100mΩ			
Voltage Rating		12-200Vdc	12-750Vdc	12-1000Vdc	12-1500Vdc
Current Rating		1-300A			
Current Endurance		300A Cont.；350A 10min.；400A 180sec.；500A 30sec.			
Break Current, Max (only 1 time)		2000A 320Vdc			
Contact Resistance (Initial)		≤1mΩ (at 300A)			
Operate Time（at 20°C）		30ms Max.			
Bounce Time（at 20°C）		5ms Max.			
Release Time（at 20°C）		10ms Max.			
Mechanical Life（0.5s:0.5s）		2×10^5 Cycles			
Electrical Life		See graph			
Current-carrying capacity curve		See graph			
Insulation resistance		Initial：100MΩ 1000Vdc			
		After test：50MΩ 1000Vdc			
Impulse withstand voltage (initial)	Main contact 1mA/1min.(sea level)	AC 3500Vrms			
	Main contact & coil 1mA/1min.(sea level)	AC 2500Vrms	AC 3500Vrms		
Mechanical performance	Shock	20G peak,11ms 1/2 Sine wave (coil energized)			
	Vibration	20G peak,80-2000Hz,Sine wave (coil energized)			
	Strength	50G acceleration,half sine wave impulse 6ms, 50 times per axis.			
Operating & Storage Condition	Ambient Temperature	-40～+85°C			
	Humidity	5～95% RH.			
Altitude		≤4000m			
Weight		approx. 430g			
Certification		UL、CE、CCC			

COIL DATA

Coil Type	Nominal voltage (at 20°C)	Pick-up voltage (at 20°C)	Drop-out voltage (at 20°C)	Start-up current	Holding power (at 20°C)	Coil polarity
PWM	12-36Vdc	≤9Vdc	≥6Vdc	3.2A MAX	approx. 2.5W	non-polarized

Coil Type	Nominal voltage (at 20°C)	Pick-up voltage (at 20°C)	Drop-out voltage (at 20°C)	Coil resistence (at 20°C)	Holding power (at 20°C)	Coil polarity
Single-coil	12Vdc	≤9.6Vdc	≥1Vdc	25Ω×(1±7%)	approx. 5.76W	non-polarized
	24Vdc	≤19.2Vdc	≥2Vdc	100Ω×(1±7%)	approx. 5.76W	non-polarized
	48Vdc	≤38.4Vdc	≥4Vdc	400Ω×(1±7%)	approx. 5.76W	non-polarized

EVD300

DC HIGH VOLTAGE EV RELAY

EVD300

PART CODE

EVD	300	G	1	DA	4
Series	Rate current: “300” =300A	Contact form: “G”=normally open,non-polarity,aux.contact “E”=normally open,non-polarity	Coil volatge: “1”= 9-36V dc “12”= 12V dc “24”= 24V dc “48”= 48V dc	Rated voltage: 12V dc-1000V dc	300 outer Casing

DIMENSIONS

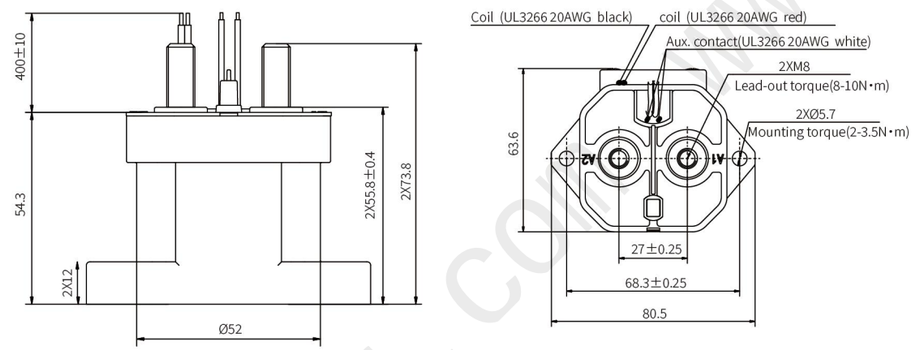

Note: 1.fastener:2xM8x8mm; 2.Mounting hardware M 5, torque 2-3.5N·m;
3.Main contact hardware M 8, torque 8-10N·m; 4.Main contact to copper area≥120mm²;

GRAPHS

■ Make & Break Power Switching Ratings

Make & Break switch (load resistance L/R≤1ms)

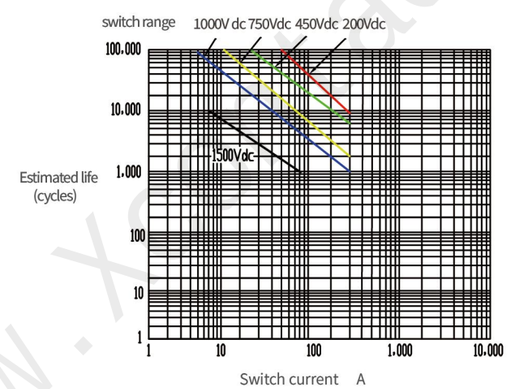

■ Current-carrying capacity curve

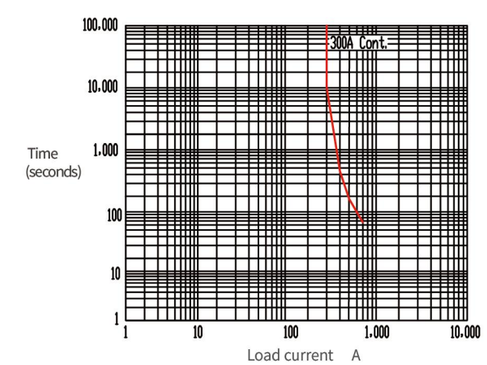

DC HIGH VOLTAGE EV RELAY

EVD350

EVD350

PERFORMANCE

ITEM		PARAMETER			
Contact Arrangement		SPST-NO			
Auxiliary Contact		SPST-NO(Optional)			
		MIN Load：8Vdc 100mA；Contact Resistance：≤100mΩ			
Voltage Rating		12-200Vdc	12-750Vdc	12-1000Vdc	12-1500Vdc
Current Rating		1-350A			
Current Endurance		350A Cont.；400A 10min.；450A 180sec.；500A 30sec.			
Break Current, Max (only 1 time)		2000A 320Vdc			
Contact Resistance (Initial)		≤1mΩ (at 350A)			
Operate Time（at 20°C）		30ms Max.			
Bounce Time（at 20°C）		5ms Max.			
Release Time（at 20°C）		10ms Max.			
Mechanical Life（0.5s:0.5s）		2×10^5 Cycles			
Electrical Life		See graph			
Current-carrying capacity curve		See graph			
Insulation resistance		Initial：100MΩ 1000Vdc			
		After test：50MΩ 1000Vdc			
Impulse withstand voltage (initial)	Main contact 1mA/1min.(sea level)	AC 3500Vrms			
	Main contact & coil 1mA/1min.(sea level)	AC 2500Vrms		AC 3500Vrms	
Mechanical performance	Shock	20G peak,11ms 1/2 Sine wave (coil energized)			
	Vibration	20G peak,80-2000Hz,Sine wave (coil energized)			
	Strength	50G acceleration,half sine wave impulse 6ms, 50 times per axis.			
Operating & Storage Condition	Ambient Temperature	-40～+85°C			
	Humidity	5～95% RH.			
Altitude		≤4000m			
Weight		approx. 430g			
Certification		UL、CE、CCC			

COIL DATA

Coil Type	Nominal voltage (at 20°C)	Pick-up voltage (at 20°C)	Drop-out voltage (at 20°C)	Start-up current	Holding power (at 20°C)	Coil polarity
PWM	12-36Vdc	≤9Vdc	≥6Vdc	3.2A MAX	approx. 2.5W	non-polarized

Coil Type	Nominal voltage (at 20°C)	Pick-up voltage (at 20°C)	Drop-out voltage (at 20°C)	Coil resistence (at 20°C)	Holding power (at 20°C)	Coil polarity
Single-coil	12Vdc	≤9.6Vdc	≥1Vdc	25Ω×(1±7%)	approx. 5.76W	non-polarized
	24Vdc	≤19.2Vdc	≥2Vdc	100Ω×(1±7%)	approx. 5.76W	non-polarized
	48Vdc	≤38.4Vdc	≥4Vdc	400Ω×(1±7%)	approx. 5.76W	non-polarized

Professional Renewable Energy Industry Solution Service Provider
东科 DONGKE

EVD350

DC HIGH VOLTAGE EV RELAY

EVD350

PART CODE

EVD	350	G	1	DA	4
Series	Rate current: “350” =350A	Contact form: “G”=normally open,non-polarity,aux.contact “E”=normally open,non-polarity	Coil volatge: “1”= 9-36V dc “12”= 12V dc “24”= 24V dc “48”= 48V dc	Rated voltage: 12V dc-1000V dc	300 outer Casing

DIMENSIONS

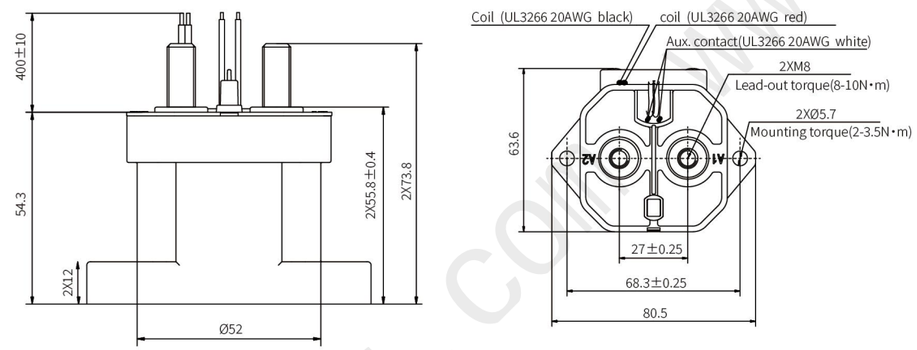

Note: 1.fastener:2xM8x8mm; 2.Mounting hardware M 5, torque 2-3.5N·m;
3.Main contact hardware M 8, torque 8-10N·m; 4.Main contact to copper area≥160mm²;

GRAPHS

■ Make & Break Power Switching Ratings

Make & Break switch (load resistance L/R≤1ms)

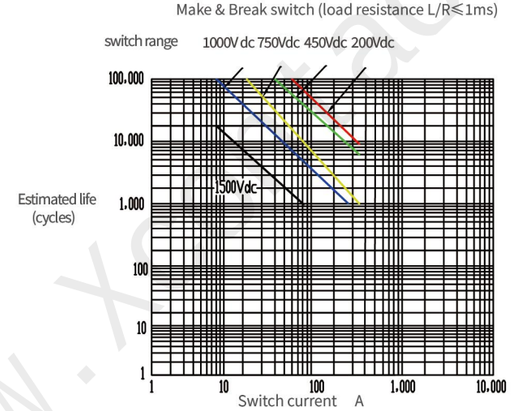

■ Current-carrying capacity curve

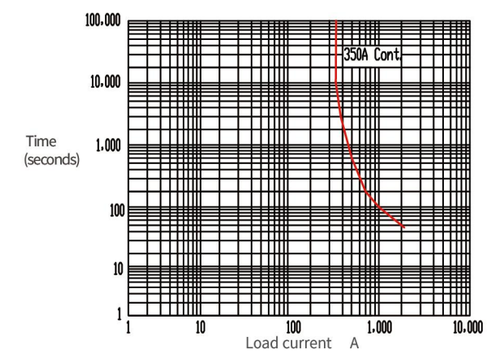

DC HIGH VOLTAGE EV RELAY

EVD400

EVD400

PERFORMANCE

ITEM		PARAMETER			
Contact Arrangement		SPST-NO			
Auxiliary Contact		SPST-NO(Optional)			
		MIN Load：8Vdc 100mA；Contact Resistance：≤100mΩ			
Voltage Rating		12-200Vdc	12-750Vdc	12-1000Vdc	12-1500Vdc
Current Rating		1-400A			
Current Endurance		400A Cont.；450A 15min.；500A 180sec.；600A 30sec.			
Break Current, Max (only 1 time)		2000A 320Vdc			
Contact Resistance (Initial)		≤1mΩ (at 400A)			
Operate Time（at 20°C）		30ms Max.			
Bounce Time（at 20°C）		5ms Max.			
Release Time（at 20°C）		10ms Max.			
Mechanical Life（0.5s:0.5s）		2×10^5Cycles			
Electrical Life		See graph			
Current-carrying capacity curve		See graph			
Insulation resistance		Initial：100MΩ 1000Vdc			
		After test：50MΩ 1000Vdc			
Impulse withstand voltage (initial)	Main contact 1mA/1min.(sea level)	AC 3500Vrms			
	Main contact & coil 1mA/1min.(sea level)	AC 2500Vrms		AC 3500Vrms	
Mechanical performance	Shock	20G peak,11ms 1/2 Sine wave (coil energized)			
	Vibration	20G peak,80-2000Hz,Sine wave (coil energized)			
	Strength	50G acceleration,half sine wave impulse 6ms, 50 times per axis.			
Operating & Storage Condition	Ambient Temperature	-40～+85°C			
	Humidity	5～95% RH.			
Altitude		≤4000m			
Weight		approx. 430g			
Certification		UL、CE、CCC			

COIL DATA

Coil Type	Nominal voltage (at 20°C)	Pick-up voltage (at 20°C)	Drop-out voltage (at 20°C)	Start-up current	Holding power (at 20°C)	Coil polarity
PWM	12-36Vdc	≤9Vdc	≥6Vdc	3.2A MAX	approx. 2.5W	non-polarized

Coil Type	Nominal voltage (at 20°C)	Pick-up voltage (at 20°C)	Drop-out voltage (at 20°C)	Coil resistence (at 20°C)	Holding power (at 20°C)	Coil polarity
Single-coil	12Vdc	≤9.6Vdc	≥1Vdc	25Ω×(1±7%)	approx. 5.76W	non-polarized
	24Vdc	≤19.2Vdc	≥2Vdc	100Ω×(1±7%)	approx. 5.76W	non-polarized
	48Vdc	≤38.4Vdc	≥4Vdc	400Ω×(1±7%)	approx. 5.76W	non-polarized

Professional Renewable Energy Industry Solution Service Provider
东科 DONGKE

EVD400

DC HIGH VOLTAGE EV RELAY

EVD400

PART CODE

EVD	400	G	1	DA	4
Series	Rate current: “400” =400A	Contact form: “G”=normally open,non-polarity,aux.contact “E”=normally open,non-polarity	Coil volatge：“1”= 9-36V dc “12”= 12V dc “24”= 24V dc “48”= 48V dc	Rated voltage: 12V dc-1000V dc	300 outer Casing

DIMENSIONS

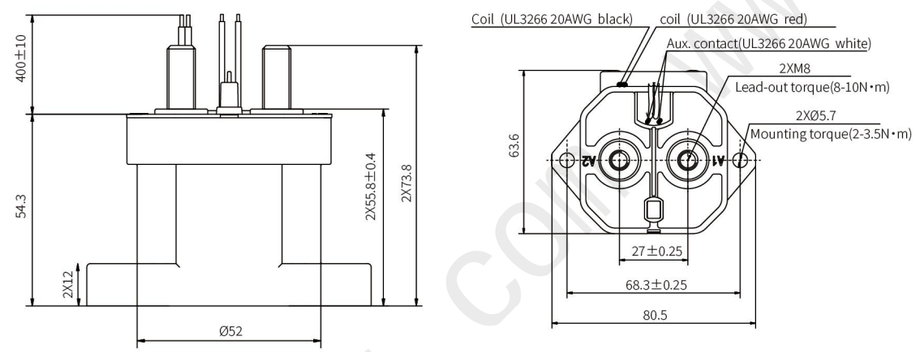

Note: 1.fastener:2xM8x8mm; 2.Mounting hardware M 5, torque 2-3.5N·m;
3.Main contact hardware M 8, torque 8-10N·m; 4.Main contact to copper area≥200mm²;

GRAPHS

■ Make & Break Power Switching Ratings

Make & Break switch (load resistance L/R≤1ms)

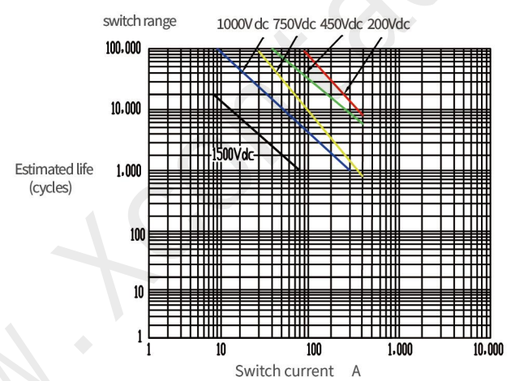

■ Current-carrying capacity curve

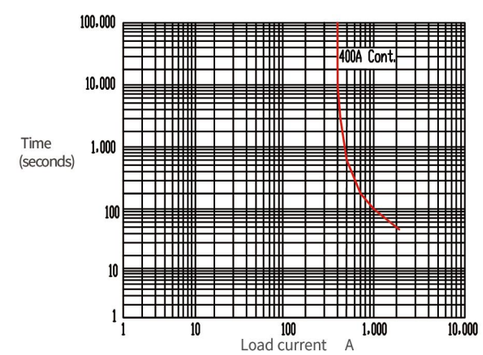

DC HIGH VOLTAGE EV RELAY

EVD150

PERFORMANCE

ITEM		PARAMETER			
Contact Arrangement		SPST-NO			
Auxiliary Contact		SPST-NO(Optional)			
		MIN Load：8Vdc 100mA；Contact Resistance：≤100mΩ			
Voltage Rating		12-200Vdc	12-750Vdc	12-1000Vdc	12-1500Vdc
Current Rating		1-150A			
Current Endurance		150A Cont.；200A 10min.；300A 180sec.；400A 30sec.			
Break Current, Max (only 1 time)		1500A 320Vdc			
Contact Resistance (Initial)		≤1mΩ (at 150A)			
Operate Time（at 20°C）		30ms Max.			
Bounce Time（at 20°C）		5ms Max.			
Release Time（at 20°C）		10ms Max.			
Mechanical Life（0.5s:0.5s）		2×10^5 Cycles			
Electrical Life		See graph			
Current-carrying capacity curve		See graph			
Insulation resistance		Initial：100MΩ 1000Vdc			
		After test：50MΩ 1000Vdc			
Impulse withstand voltage (initial)	Main contact 1mA/1min.(sea level)	AC 3500Vrms			
	Main contact & coil 1mA/1min.(sea level)	AC 2500Vrms	AC 3500Vrms		
Mechanical performance	Shock	20G peak,11ms 1/2 Sine wave (coil energized)			
	Vibration	20G peak,80-2000Hz,Sine wave (coil energized)			
	Strength	50G acceleration,half sine wave impulse 6ms, 50 times per axis.			
Operating & Storage Condition	Ambient Temperature	-40～+85°C			
	Humidity	5～95% RH.			
Altitude		≤4000m			
Weight		approx. 430g			
Certification		UL、CE、CCC			

COIL DATA

Coil Type	Nominal voltage (at 20°C)	Pick-up voltage (at 20°C)	Drop-out voltage (at 20°C)	Start-up current	Holding power (at 20°C)	Coil polarity
PWM	12-36Vdc	≤9Vdc	≥6Vdc	3.2A MAX	approx. 2.5W	non-polarized

Coil Type	Nominal voltage (at 20°C)	Pick-up voltage (at 20°C)	Drop-out voltage (at 20°C)	Coil resistence (at 20°C)	Holding power (at 20°C)	Coil polarity
Single-coil	12Vdc	≤9.6Vdc	≥1Vdc	25Ω×(1±7%)	approx. 5.76W	non-polarized
	24Vdc	≤19.2Vdc	≥2Vdc	100Ω×(1±7%)	approx. 5.76W	non-polarized
	48Vdc	≤38.4Vdc	≥4Vdc	400Ω×(1±7%)	approx. 5.76W	non-polarized

EVD150
DC HIGH VOLTAGE EV RELAY
EVD150

PART CODE

EVD	150	G	1	DA	4
Series	Rate current: “150” =150A	Contact form: “G”=normally open,non-polarity,aux.contact “E”=normally open,non-polarity	Coil volatge: “1”= 9-36V dc “12”= 12V dc “24”= 24V dc “48”= 48V dc	Rated voltage: 12V dc-1000V dc	300 outer Casing

DIMENSIONS

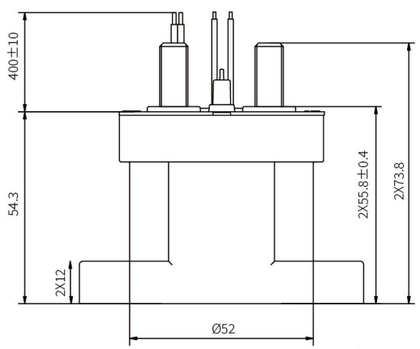

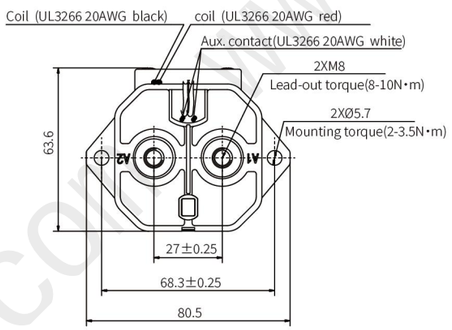

Note: 1.fastener:2xM8x8mm; 2.Mounting hardware M 5, torque 2-3.5N·m;
3.Main contact hardware M 8, torque 8-10N·m; 4.Main contact to copper area≥60mm²;

GRAPHS

■ Make & Break Power Switching Ratings

Make & Break switch (load resistance L/R≤1ms)

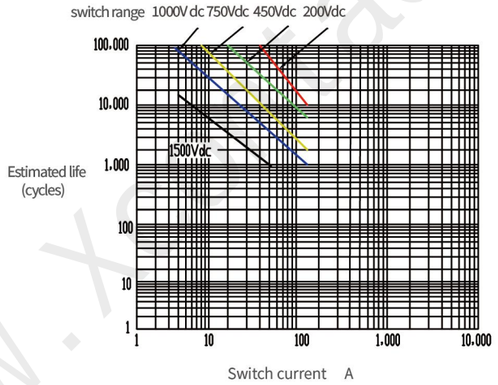

■ Current-carrying capacity curve

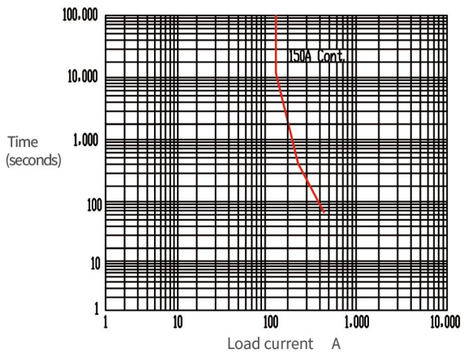

DC HIGH VOLTAGE EV RELAY

EVD200

EVD200

PERFORMANCE

ITEM		PARAMETER			
Contact Arrangement		SPST-NO			
Auxiliary Contact		SPST-NO(Optional)			
		MIN Load：8Vdc 100mA；Contact Resistance：≤100mΩ			
Voltage Rating		12-200Vdc	12-750Vdc	12-1000Vdc	12-1500Vdc
Current Rating		1-200A			
Current Endurance		200A Cont.；300A 10min.；400A 180sec.；500A 30sec.			
Break Current, Max (only 1 time)		2000A 320Vdc			
Contact Resistance (Initial)		≤1mΩ (at 200A)			
Operate Time（at 20°C）		30ms Max.			
Bounce Time（at 20°C）		5ms Max.			
Release Time（at 20°C）		10ms Max.			
Mechanical Life（0.5s:0.5s）		2×10^5 Cycles			
Electrical Life		See graph			
Current-carrying capacity curve		See graph			
Insulation resistance		Initial：100MΩ 1000Vdc			
		After test：50MΩ 1000Vdc			
Impulse withstand voltage (initial)	Main contact 1mA/1min.(sea level)	AC 3500Vrms			
	Main contact & coil 1mA/1min.(sea level)	AC 2500Vrms	AC 3500Vrms		
Mechanical performance	Shock	20G peak,11ms 1/2 Sine wave (coil energized)			
	Vibration	20G peak,80-2000Hz,Sine wave (coil energized)			
	Strength	50G acceleration,half sine wave impulse 6ms, 50 times per axis.			
Operating & Storage Condition	Ambient Temperature	-40～+85°C			
	Humidity	5～95% RH.			
Altitude		≤4000m			
Weight		approx. 430g			
Certification		UL、CE、CCC			

COIL DATA

Coil Type	Nominal voltage (at 20°C)	Pick-up voltage (at 20°C)	Drop-out voltage (at 20°C)	Start-up current	Holding power (at 20°C)	Coil polarity
PWM	12-36Vdc	≤9Vdc	≥6Vdc	3.2A MAX	approx. 2.5W	non-polarized

Coil Type	Nominal voltage (at 20°C)	Pick-up voltage (at 20°C)	Drop-out voltage (at 20°C)	Coil resistence (at 20°C)	Holding power (at 20°C)	Coil polarity
Single-coil	12Vdc	≤9.6Vdc	≥1Vdc	25Ω×(1±7%)	approx. 5.76W	non-polarized
	24Vdc	≤19.2Vdc	≥2Vdc	100Ω×(1±7%)	approx. 5.76W	non-polarized
	48Vdc	≤38.4Vdc	≥4Vdc	400Ω×(1±7%)	approx. 5.76W	non-polarized

EVD200

DC HIGH VOLTAGE EV RELAY

EVD200

PART CODE

EVD	200	G	1	DA	4
Series	Rate current: “200” =200A	Contact form: “G”=normally open,non-polarity,aux.contact “E”=normally open,non-polarity	Coil volatge: “1”= 9-36V dc “12”= 12V dc “24”= 24V dc “48”= 48V dc	Rated voltage: 12V dc-1000V dc	300 outer Casing

DIMENSIONS

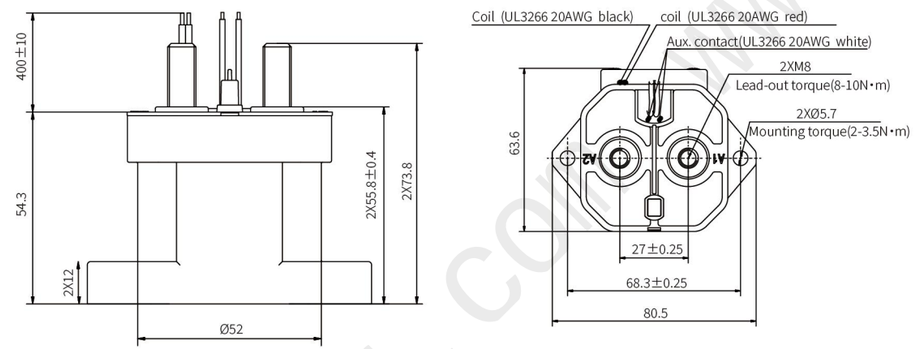

Note: 1.fastener:2xM8x8mm; 2.Mounting hardware M 5, torque 2-3.5N•m;
3.Main contact hardware M 8, torque 8-10N•m; 4.Main contact to copper area≥75mm²;

GRAPHS

■ Make & Break Power Switching Ratings

Make & Break switch (load resistance L/R≤1ms)

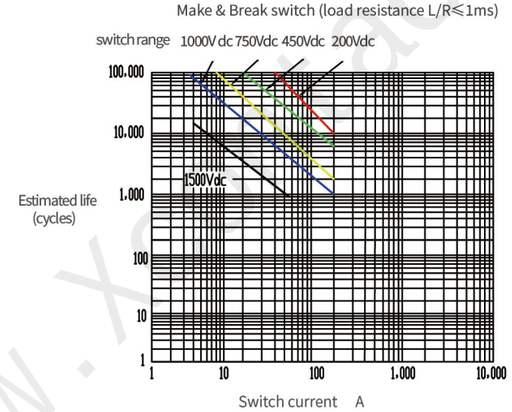

■ Current-carrying capacity curve

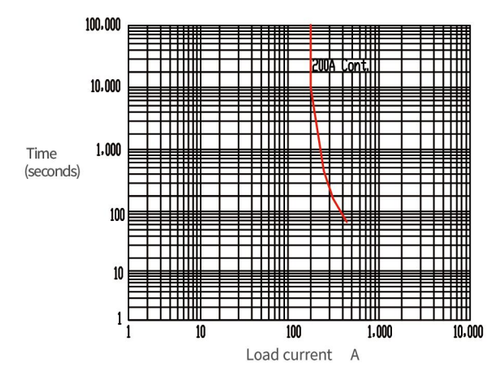

DC HIGH VOLTAGE EV RELAY

EVD250

EVD250

PERFORMANCE

ITEM		PARAMETER			
Contact Arrangement		SPST-NO			
Auxiliary Contact		SPST-NO(Optional)			
		MIN Load：8Vdc 100mA；Contact Resistance：≤100mΩ			
Voltage Rating		12-200Vdc	12-750Vdc	12-1000Vdc	12-1500Vdc
Current Rating		1-250A			
Current Endurance		250A Cont.；300A 10min.；400A 180sec.；500A 30sec.			
Break Current, Max (only 1 time)		2000A 320Vdc			
Contact Resistance (Initial)		≤1mΩ (at 250A)			
Operate Time（at 20°C）		30ms Max.			
Bounce Time（at 20°C）		5ms Max.			
Release Time（at 20°C）		10ms Max.			
Mechanical Life（0.5s:0.5s）		2×10^5 Cycles			
Electrical Life		See graph			
Current-carrying capacity curve		See graph			
Insulation resistance		Initial：100MΩ 1000Vdc			
		After test：50MΩ 1000Vdc			
Impulse withstand voltage (initial)	Main contact 1mA/1min.(sea level)	AC 3500Vrms			
	Main contact & coil 1mA/1min.(sea level)	AC 2500Vrms		AC 3500Vrms	
Mechanical performance	Shock	20G peak,11ms 1/2 Sine wave (coil energized)			
	Vibration	20G peak,80-2000Hz,Sine wave (coil energized)			
	Strength	50G acceleration,half sine wave impulse 6ms, 50 times per axis.			
Operating & Storage Condition	Ambient Temperature	-40～+85°C			
	Humidity	5～95% RH.			
Altitude		≤4000m			
Weight		approx. 430g			
Certification		UL、CE、CCC			

COIL DATA

Coil Type	Nominal voltage (at 20°C)	Pick-up voltage (at 20°C)	Drop-out voltage (at 20°C)	Start-up current	Holding power (at 20°C)	Coil polarity
PWM	12-36Vdc	≤9Vdc	≥6Vdc	3.2A MAX	approx. 2.5W	non-polarized

Coil Type	Nominal voltage (at 20°C)	Pick-up voltage (at 20°C)	Drop-out voltage (at 20°C)	Coil resistence (at 20°C)	Holding power (at 20°C)	Coil polarity
Single-coil	12Vdc	≤9.6Vdc	≥1Vdc	25Ω×(1±7%)	approx. 5.76W	non-polarized
	24Vdc	≤19.2Vdc	≥2Vdc	100Ω×(1±7%)	approx. 5.76W	non-polarized
	48Vdc	≤38.4Vdc	≥4Vdc	400Ω×(1±7%)	approx. 5.76W	non-polarized

EVD250

DC HIGH VOLTAGE EV RELAY

EVD250

PART CODE

EVD	250	G	1	DA	4
Series	Rate current: “250” =250A	Contact form: “G”=normally open,non-polarity,aux.contact “E”=normally open,non-polarity;	Coil volatge: “1”= 9-36V dc “12”= 12V dc “24”= 24V dc “48”= 48V dc	Rated voltage: 12V dc-1000V dc	300 outer Casing

DIMENSIONS

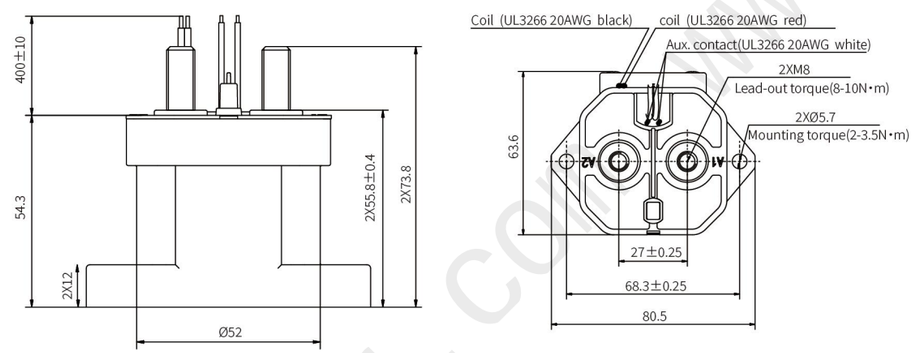

Note: 1.fastener:2xM8x8mm; 2.Mounting hardware M 5, torque 2-3.5N·m;
3.Main contact hardware M 8, torque 8-10N·m; 4.Main contact to copper area≥100mm²;

GRAPHS

■ Make & Break Power Switching Ratings

Make & Break switch (load resistance L/R≤1ms)

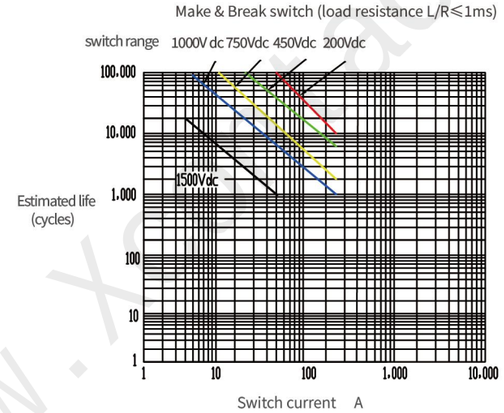

■ Current-carrying capacity curve

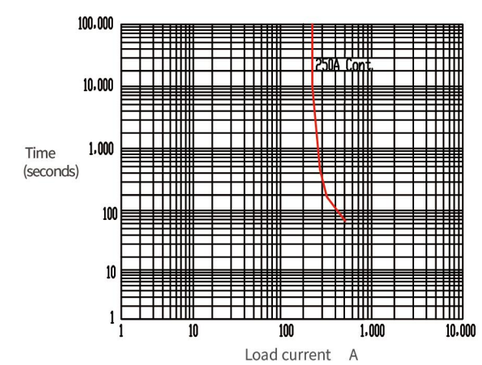

DC HIGH VOLTAGE EV RELAY

EVD300

EVD300

PERFORMANCE

ITEM		PARAMETER			
Contact Arrangement		SPST-NO			
Auxiliary Contact		SPST-NO(Optional)			
		MIN Load：8Vdc 100mA；Contact Resistance：≤100mΩ			
Voltage Rating		12-200Vdc	12-750Vdc	12-1000Vdc	12-1500Vdc
Current Rating		1-300A			
Current Endurance		300A Cont.；350A 10min.；400A 180sec.；500A 30sec.			
Break Current, Max (only 1 time)		2000A 320Vdc			
Contact Resistance (Initial)		≤1mΩ (at 300A)			
Operate Time（at 20°C）		30ms Max.			
Bounce Time（at 20°C）		5ms Max.			
Release Time（at 20°C）		10ms Max.			
Mechanical Life（0.5s:0.5s）		2×10^5 Cycles			
Electrical Life		See graph			
Current-carrying capacity curve		See graph			
Insulation resistance		Initial：100MΩ 1000Vdc			
		After test：50MΩ 1000Vdc			
Impulse withstand voltage (initial)	Main contact 1mA/1min.(sea level)	AC 3500Vrms			
	Main contact & coil 1mA/1min.(sea level)	AC 2500Vrms	AC 3500Vrms		
Mechanical performance	Shock	20G peak,11ms 1/2 Sine wave (coil energized)			
	Vibration	20G peak,80-2000Hz,Sine wave (coil energized)			
	Strength	50G acceleration,half sine wave impulse 6ms, 50 times per axis.			
Operating & Storage Condition	Ambient Temperature	-40～+85°C			
	Humidity	5～95% RH.			
Altitude		≤4000m			
Weight		approx. 430g			
Certification		UL、CE、CCC			

COIL DATA

Coil Type	Nominal voltage (at 20°C)	Pick-up voltage (at 20°C)	Drop-out voltage (at 20°C)	Start-up current	Holding power (at 20°C)	Coil polarity
PWM	12-36Vdc	≤9Vdc	≥6Vdc	3.2A MAX	approx. 2.5W	non-polarized

Coil Type	Nominal voltage (at 20°C)	Pick-up voltage (at 20°C)	Drop-out voltage (at 20°C)	Coil resistence (at 20°C)	Holding power (at 20°C)	Coil polarity
Single-coil	12Vdc	≤9.6Vdc	≥1Vdc	25Ω×(1±7%)	approx. 5.76W	non-polarized
	24Vdc	≤19.2Vdc	≥2Vdc	100Ω×(1±7%)	approx. 5.76W	non-polarized
	48Vdc	≤38.4Vdc	≥4Vdc	400Ω×(1±7%)	approx. 5.76W	non-polarized

EVD300

DC HIGH VOLTAGE EV RELAY

EVD300

PART CODE

EVD	300	G	1	DA	4
Series	Rate current: “300” =300A	Contact form: “G”=normally open,non-polarity,aux.contact “E”=normally open,non-polarity	Coil volatge: “1”= 9-36V dc “12”= 12V dc “24”= 24V dc “48”= 48V dc	Rated voltage: 12V dc-1000V dc	300 outer Casing

DIMENSIONS

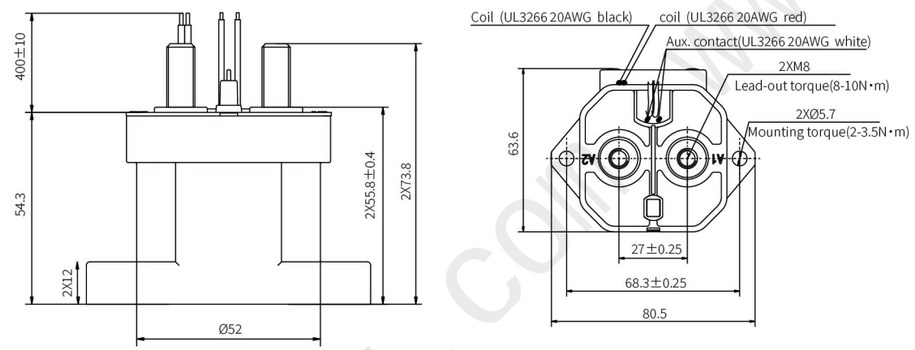

Note: 1.fastener:2xM8x8mm; 2.Mounting hardware M 5, torque 2-3.5N·m;
3.Main contact hardware M 8, torque 8-10N·m; 4.Main contact to copper area≥120mm²;

GRAPHS

■ Make & Break Power Switching Ratings

Make & Break switch (load resistance L/R≤1ms)

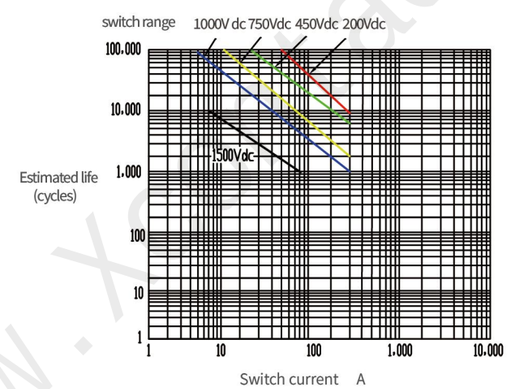

■ Current-carrying capacity curve

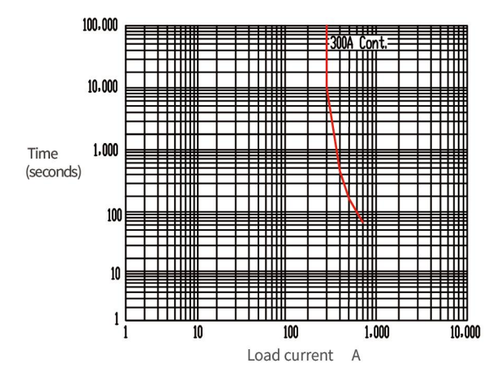

DC HIGH VOLTAGE EV RELAY

EVD350

EVD350

PERFORMANCE

ITEM		PARAMETER			
Contact Arrangement		SPST-NO			
Auxiliary Contact		SPST-NO(Optional)			
		MIN Load：8Vdc 100mA；Contact Resistance：≤100mΩ			
Voltage Rating		12-200Vdc	12-750Vdc	12-1000Vdc	12-1500Vdc
Current Rating		1-350A			
Current Endurance		350A Cont.；400A 10min.；450A 180sec.；500A 30sec.			
Break Current, Max (only 1 time)		2000A 320Vdc			
Contact Resistance (Initial)		≤1mΩ (at 350A)			
Operate Time（at 20°C）		30ms Max.			
Bounce Time（at 20°C）		5ms Max.			
Release Time（at 20°C）		10ms Max.			
Mechanical Life（0.5s:0.5s）		2×10^5 Cycles			
Electrical Life		See graph			
Current-carrying capacity curve		See graph			
Insulation resistance		Initial：100MΩ 1000Vdc			
		After test：50MΩ 1000Vdc			
Impulse withstand voltage (initial)	Main contact 1mA/1min.(sea level)	AC 3500Vrms			
	Main contact & coil 1mA/1min.(sea level)	AC 2500Vrms		AC 3500Vrms	
Mechanical performance	Shock	20G peak,11ms 1/2 Sine wave (coil energized)			
	Vibration	20G peak,80-2000Hz,Sine wave (coil energized)			
	Strength	50G acceleration,half sine wave impulse 6ms, 50 times per axis.			
Operating & Storage Condition	Ambient Temperature	-40～+85°C			
	Humidity	5～95% RH.			
Altitude		≤4000m			
Weight		approx. 430g			
Certification		UL、CE、CCC			

COIL DATA

Coil Type	Nominal voltage (at 20°C)	Pick-up voltage (at 20°C)	Drop-out voltage (at 20°C)	Start-up current	Holding power (at 20°C)	Coil polarity
PWM	12-36Vdc	≤9Vdc	≥6Vdc	3.2A MAX	approx. 2.5W	non-polarized

Coil Type	Nominal voltage (at 20°C)	Pick-up voltage (at 20°C)	Drop-out voltage (at 20°C)	Coil resistence (at 20°C)	Holding power (at 20°C)	Coil polarity
Single-coil	12Vdc	≤9.6Vdc	≥1Vdc	25Ω×(1±7%)	approx. 5.76W	non-polarized
	24Vdc	≤19.2Vdc	≥2Vdc	100Ω×(1±7%)	approx. 5.76W	non-polarized
	48Vdc	≤38.4Vdc	≥4Vdc	400Ω×(1±7%)	approx. 5.76W	non-polarized

Professional Renewable Energy Industry Solution Service Provider
东科 DONGKE

EVD350

DC HIGH VOLTAGE EV RELAY

EVD350

PART CODE

EVD	350	G	1	DA	4
Series	Rate current: “350” =350A	Contact form: “G”=normally open,non-polarity,aux.contact “E”=normally open,non-polarity	Coil volatge: “1”= 9-36V dc “12”= 12V dc “24”= 24V dc “48”= 48V dc	Rated voltage: 12V dc-1000V dc	300 outer Casing

DIMENSIONS

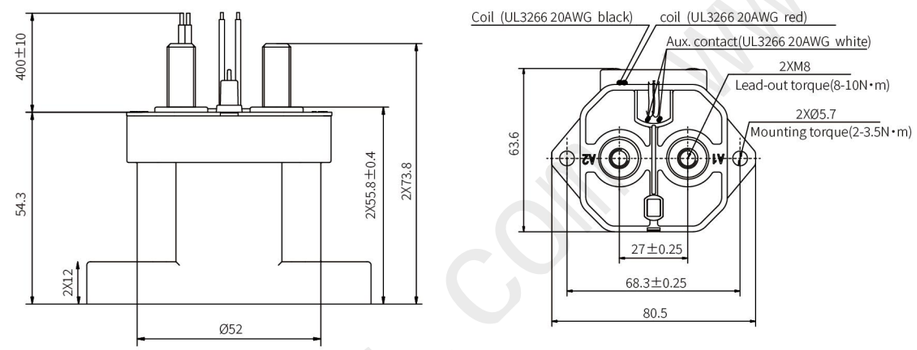

Note: 1.fastener:2xM8x8mm; 2.Mounting hardware M 5, torque 2-3.5N·m;
3.Main contact hardware M 8, torque 8-10N·m; 4.Main contact to copper area≥160mm²;

GRAPHS

■ Make & Break Power Switching Ratings

Make & Break switch (load resistance L/R≤1ms)

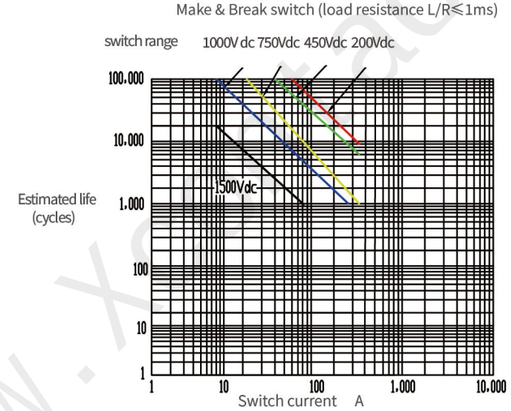

■ Current-carrying capacity curve

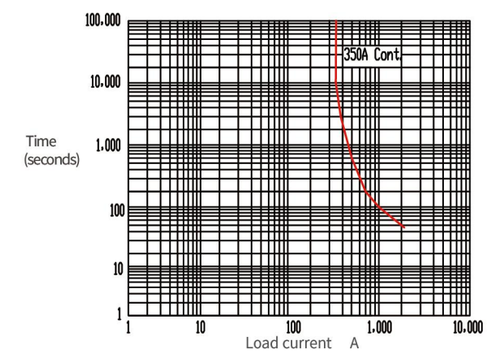

DC HIGH VOLTAGE EV RELAY

EVD400

EVD400

PERFORMANCE

ITEM		PARAMETER			
Contact Arrangement		SPST-NO			
Auxiliary Contact		SPST-NO(Optional)			
		MIN Load：8Vdc 100mA；Contact Resistance：≤100mΩ			
Voltage Rating		12-200Vdc	12-750Vdc	12-1000Vdc	12-1500Vdc
Current Rating		1-400A			
Current Endurance		400A Cont.；450A 15min.；500A 180sec.；600A 30sec.			
Break Current, Max (only 1 time)		2000A 320Vdc			
Contact Resistance (Initial)		≤1mΩ (at 400A)			
Operate Time（at 20°C）		30ms Max.			
Bounce Time（at 20°C）		5ms Max.			
Release Time（at 20°C）		10ms Max.			
Mechanical Life（0.5s:0.5s）		2×10^5Cycles			
Electrical Life		See graph			
Current-carrying capacity curve		See graph			
Insulation resistance		Initial：100MΩ 1000Vdc			
		After test：50MΩ 1000Vdc			
Impulse withstand voltage (initial)	Main contact 1mA/1min.(sea level)	AC 3500Vrms			
	Main contact & coil 1mA/1min.(sea level)	AC 2500Vrms		AC 3500Vrms	
Mechanical performance	Shock	20G peak,11ms 1/2 Sine wave (coil energized)			
	Vibration	20G peak,80-2000Hz,Sine wave (coil energized)			
	Strength	50G acceleration,half sine wave impulse 6ms, 50 times per axis.			
Operating & Storage Condition	Ambient Temperature	-40～+85°C			
	Humidity	5～95% RH.			
Altitude		≤4000m			
Weight		approx. 430g			
Certification		UL、CE、CCC			

COIL DATA

Coil Type	Nominal voltage (at 20°C)	Pick-up voltage (at 20°C)	Drop-out voltage (at 20°C)	Start-up current	Holding power (at 20°C)	Coil polarity
PWM	12-36Vdc	≤9Vdc	≥6Vdc	3.2A MAX	approx. 2.5W	non-polarized

Coil Type	Nominal voltage (at 20°C)	Pick-up voltage (at 20°C)	Drop-out voltage (at 20°C)	Coil resistence (at 20°C)	Holding power (at 20°C)	Coil polarity
Single-coil	12Vdc	≤9.6Vdc	≥1Vdc	25Ω×(1±7%)	approx. 5.76W	non-polarized
	24Vdc	≤19.2Vdc	≥2Vdc	100Ω×(1±7%)	approx. 5.76W	non-polarized
	48Vdc	≤38.4Vdc	≥4Vdc	400Ω×(1±7%)	approx. 5.76W	non-polarized

Professional Renewable Energy Industry Solution Service Provider
东科 DONGKE

EVD400

DC HIGH VOLTAGE EV RELAY

EVD400

PART CODE

EVD	400	G	1	DA	4
Series	Rate current: “400” =400A	Contact form: “G”=normally open,non-polarity,aux.contact “E”=normally open,non-polarity	Coil volatge：“1”= 9-36V dc “12”= 12V dc “24”= 24V dc “48”= 48V dc	Rated voltage: 12V dc-1000V dc	300 outer Casing

DIMENSIONS

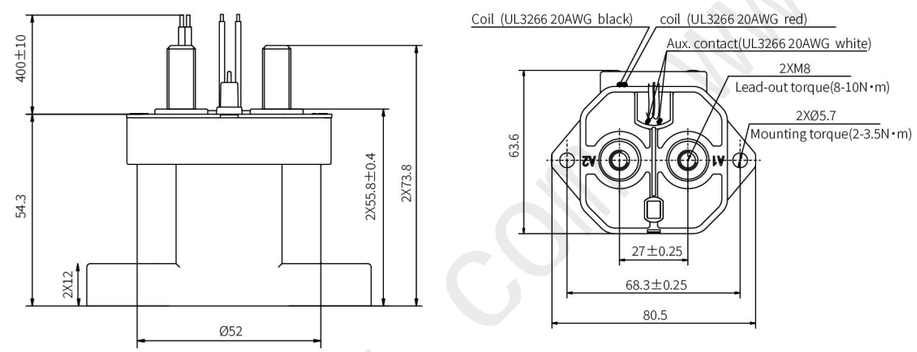

Note: 1.fastener:2xM8x8mm; 2.Mounting hardware M 5, torque 2-3.5N·m;
3.Main contact hardware M 8, torque 8-10N·m; 4.Main contact to copper area≥200mm²;

GRAPHS

■ Make & Break Power Switching Ratings

Make & Break switch (load resistance L/R≤1ms)

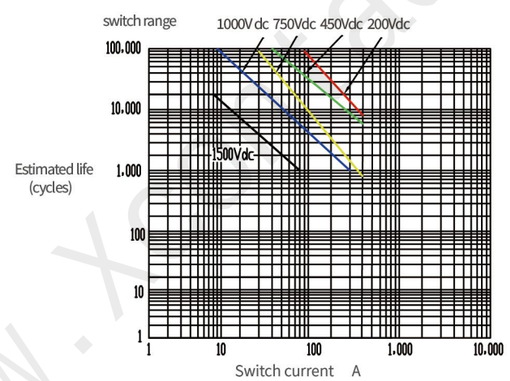

■ Current-carrying capacity curve

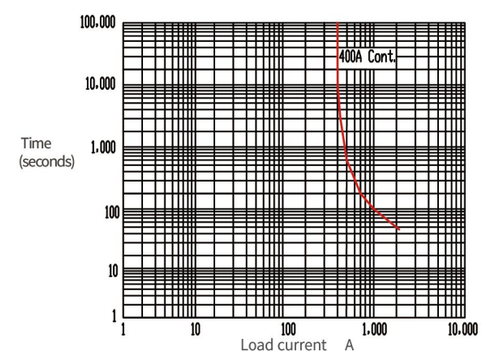

DC HIGH VOLTAGE EV RELAY

EVD400

PERFORMANCE

ITEM		PARAMETER			
Contact Arrangement		SPST-NO			
Auxiliary Contact		SPST-NO(Optional)			
		MIN Load：8Vdc 100mA；Contact Resistance：≤100mΩ			
Voltage Rating		12-200Vdc	12-750Vdc	12-1000Vdc	12-1500Vdc
Current Rating		1-400A			
Current Endurance		400A Cont.；500A 10min.；600A 180sec.；700A 30sec.			
Break Current, Max (only 1 time)		2500A 320Vdc			
Contact Resistance (Initial)		≤1mΩ (at 400A)			
Operate Time（at 20°C）		40ms Max.			
Bounce Time（at 20°C）		5ms Max.			
Release Time（at 20°C）		20ms Max.			
Mechanical Life（0.5s:0.5s）		2×10^5 Cycles			
Electrical Life		See graph			
Current-carrying capacity curve		See graph			
Insulation resistance		Initial：100MΩ 1000Vdc			
		After test：50MΩ 1000Vdc			
Impulse withstand voltage (initial)	Main contact 1mA/1min.(sea level)	AC 3500Vrms			
	Main contact & coil 1mA/1min.(sea level)	AC 2500Vrms		AC 3500Vrms	
Mechanical performance	Shock	20G peak,11ms 1/2 Sine wave (coil energized)			
	Vibration	20G peak,80-2000Hz,Sine wave (coil energized)			
	Strength	50G acceleration,half sine wave impulse 6ms, 50 times per axis.			
Operating & Storage Condition	Ambient Temperature	-40～+85°C			
	Humidity	5～95% RH.			
Altitude		≤4000m			
Weight		approx. 990g			
Certification		UL、CE、CCC			

COIL DATA

Coil Type	Nominal voltage (at 20°C)	Pick-up voltage (at 20°C)	Drop-out voltage (at 20°C)	Start-up current	Holding power (at 20°C)	Coil polarity
PWM	12-36Vdc	≤9Vdc	≥6Vdc	3.2A MAX	approx. 3.0W	non-polarized

Professional Renewable Energy Industry Solution Service Provider
东科 DONGKE

EVD400

DC HIGH VOLTAGE EV RELAY

EVD400

PART CODE

EVD	400	G	1	DA	5
Series	Rate current: “400” =400A	Contact form: “G”=normally open,non-polarity,aux.contact “E”=normally open,non-polarity	Coil volatge: “1”= 9-36V dc	Rated voltage: 12V dc-1000V dc	600 outer Casing

DIMENSIONS

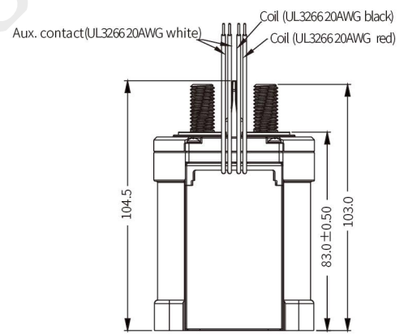

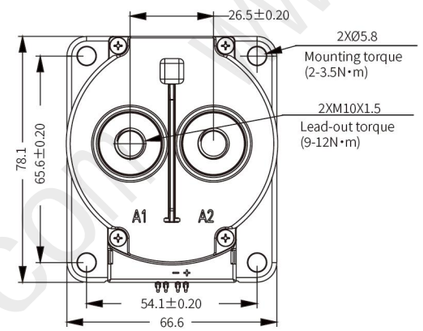

Note: 1.fastener:2xM10x8mm; 2.Mounting hardware M 5, torque 2-3.5N•m;
3.Main contact hardware M 10, torque 9-12N•m; 4.Main contact to copper area≥200mm²;

GRAPHS

■ Make & Break Power Switching Ratings

Make & Break switch (load resistance L/R≤1ms)

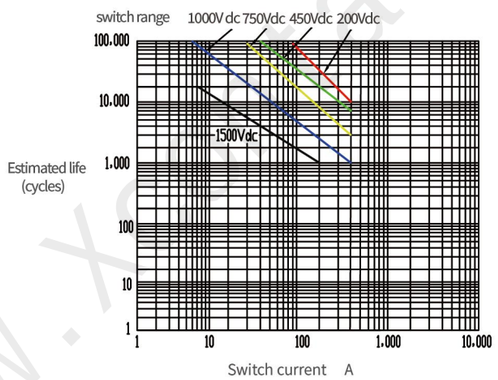

■ Current-carrying capacity curve

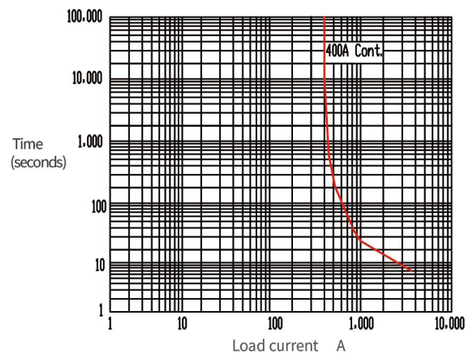

DC HIGH VOLTAGE EV RELAY

EVD500

EVD500

PERFORMANCE

ITEM		PARAMETER			
Contact Arrangement		SPST-NO			
Auxiliary Contact		SPST-NO(Optional)			
		MIN Load：8Vdc 100mA；Contact Resistance：≤100mΩ			
Voltage Rating		12-200Vdc	12-750Vdc	12-1000Vdc	12-1500Vdc
Current Rating		1-500A			
Current Endurance		500A Cont.；550A 10min.；600A 180sec.；700A 30sec.			
Break Current, Max (only 1 time)		2500A 320Vdc			
Contact Resistance (Initial)		≤1mΩ (at 500A)			
Operate Time（at 20°C）		40ms Max.			
Bounce Time（at 20°C）		5ms Max.			
Release Time（at 20°C）		20ms Max.			
Mechanical Life（0.5s:0.5s）		2×10^5 Cycles			
Electrical Life		See graph			
Current-carrying capacity curve		See graph			
Insulation resistance		Initial：100MΩ 1000Vdc			
		After test：50MΩ 1000Vdc			
Impulse withstand voltage (initial)	Main contact 1mA/1min.(sea level)	AC 3500Vrms			
	Main contact & coil 1mA/1min.(sea level)	AC 2500Vrms		AC 3500Vrms	
Mechanical performance	Shock	20G peak,11ms 1/2 Sine wave (coil energized)			
	Vibration	20G peak,80-2000Hz,Sine wave (coil energized)			
	Strength	50G acceleration,half sine wave impulse 6ms, 50 times per axis.			
Operating & Storage Condition	Ambient Temperature	-40～+85°C			
	Humidity	5～95% RH.			
Altitude		≤4000m			
Weight		approx. 990g			
Certification		UL、CE、CCC			

COIL DATA

Coil Type	Nominal voltage (at 20°C)	Pick-up voltage (at 20°C)	Drop-out voltage (at 20°C)	Start-up current	Holding power (at 20°C)	Coil polarity
PWM	12-36Vdc	≤9Vdc	≥6Vdc	3.2A MAX	approx. 3.0W	non-polarized

EVD500

DC HIGH VOLTAGE EV RELAY

EVD500

PART CODE

EVD	500	G	1	DA	5
Series	Rate current: “500” =500A	Contact form: “G”=normally open,non-polarity,aux.contact “E”=normally open,non-polarity	Coil volatge：“1”= 9-36V dc	Rated voltage: 12V dc-1000V dc	600 outer Casing

DIMENSIONS

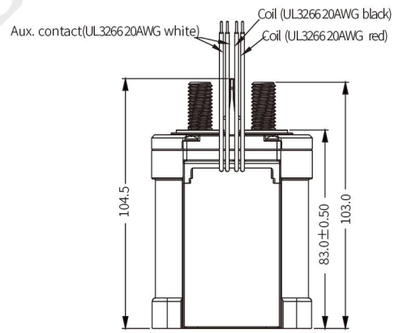

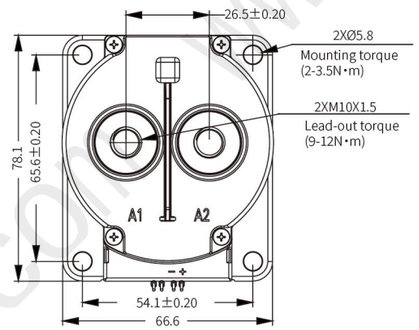

Note: 1.fastener:2xM10x8mm; 2.Mounting hardware M 5, torque 2-3.5N·m;
3.Main contact hardware M 10, torque 9-12N·m; 4.Main contact to copper area≥250mm²;

GRAPHS

■ Make & Break Power Switching Ratings

Make & Break switch (load resistance L/R≤1ms)

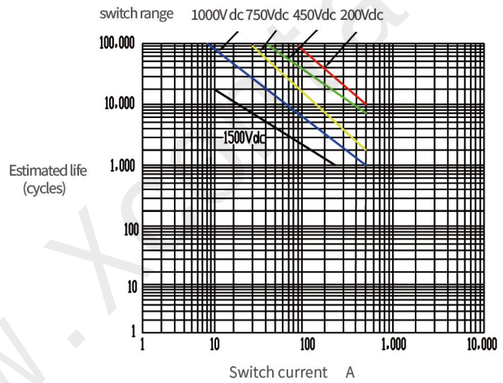

■ Current-carrying capacity curve

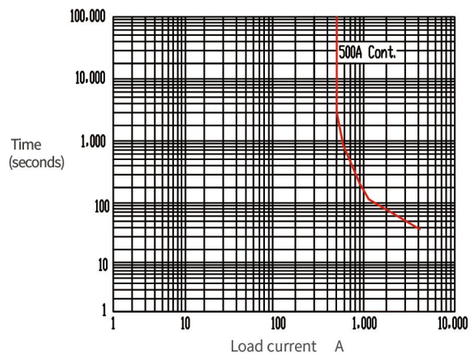

DC HIGH VOLTAGE EV RELAY

EVD600

EVD600

PERFORMANCE

ITEM		PARAMETER			
Contact Arrangement		SPST-NO			
Auxiliary Contact		SPST-NO(Optional)			
		MIN Load：8Vdc 100mA；Contact Resistance：≤100mΩ			
Voltage Rating		12-200Vdc	12-750Vdc	12-1000Vdc	12-1500Vdc
Current Rating		1-600A			
Current Endurance		600A Cont.；650A 10min.；700A 180sec.；800A 30sec.			
Break Current, Max (only 1 time)		2500A 320Vdc			
Contact Resistance (Initial)		≤1mΩ (at 600A)			
Operate Time（at 20°C）		40ms Max.			
Bounce Time（at 20°C）		5ms Max.			
Release Time（at 20°C）		20ms Max.			
Mechanical Life（0.5s:0.5s）		2×10^5 Cycles			
Electrical Life		See graph			
Current-carrying capacity curve		See graph			
Insulation resistance		Initial：100MΩ 1000Vdc			
		After test：50MΩ 1000Vdc			
Impulse withstand voltage (initial)	Main contact 1mA/1min.(sea level)	AC 3500Vrms			
	Main contact & coil 1mA/1min.(sea level)	AC 2500Vrms		AC 3500Vrms	
Mechanical performance	Shock	20G peak,11ms 1/2 Sine wave (coil energized)			
	Vibration	20G peak,80-2000Hz,Sine wave (coil energized)			
	Strength	50G acceleration,half sine wave impulse 6ms, 50 times per axis.			
Operating & Storage Condition	Ambient Temperature	-40～+85°C			
	Humidity	5～95% RH.			
Altitude		≤4000m			
Weight		approx. 990g			
Certification		UL、CE、CCC			

COIL DATA

Coil Type	Nominal voltage (at 20°C)	Pick-up voltage (at 20°C)	Drop-out voltage (at 20°C)	Start-up current	Holding power (at 20°C)	Coil polarity
PWM	12-36Vdc	≤9Vdc	≥6Vdc	3.2A MAX	approx. 3.0W	non-polarized

Professional Renewable Energy Industry Solution Service Provider
东科 DONGKE

EVD600

DC HIGH VOLTAGE EV RELAY

EVD600

PART CODE

EVD	600	G	1	DA	5
Series	Rate current: “600” =600A	Contact form: “G”=normally open,non-polarity,aux.contact “E”=normally open,non-polarity	Coil volatge：“1”=9-36V dc	Rated voltage: 12V dc-1000V dc	600 outer Casing

DIMENSIONS

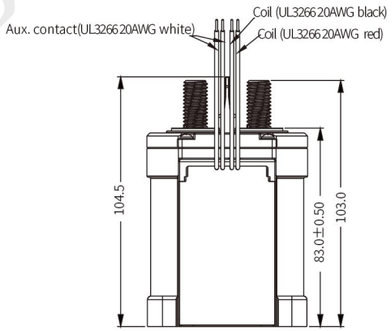

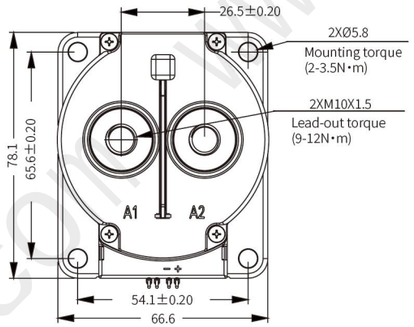

Note: 1.fastener:2xM10x8mm; 2.Mounting hardware M 5, torque 2-3.5N·m;
3.Main contact hardware M 10, torque 9-12N·m; 4.Main contact to copper area≥300mm²;

GRAPHS

■ Make & Break Power Switching Ratings

Make & Break switch (load resistance L/R≤1ms)

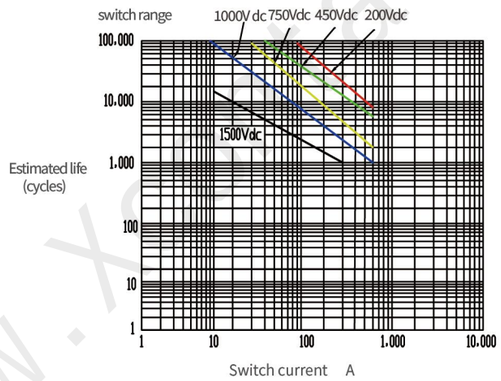

■ Current-carrying capacity curve

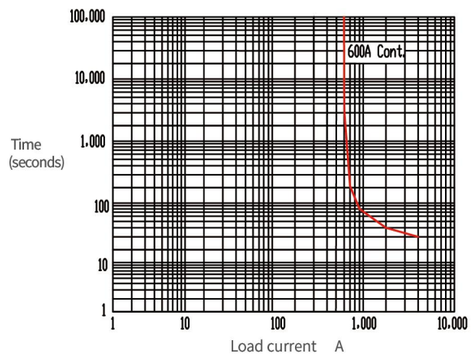

DC HIGH VOLTAGE EV RELAY

EVD800

EVD800

PERFORMANCE

ITEM		PARAMETER			
Contact Arrangement		SPST-NO			
Auxiliary Contact		SPST-NO(Optional)			
		MIN Load：8Vdc 100mA；Contact Resistance：≤100mΩ			
Voltage Rating		12-200Vdc	12-750Vdc	12-1000Vdc	12-1500Vdc
Current Rating		1-800A			
Current Endurance		800A Cont.；900A 10min.；1000A 120sec.；1100A 30sec.			
Break Current, Max (only 1 time)		2500A 320Vdc			
Contact Resistance (Initial)		≤1mΩ (at 800A)			
Operate Time (at 20°C)		40ms Max.			
Bounce Time (at 20°C)		5ms Max.			
Release Time (at 20°C)		20ms Max.			
Mechanical Life (0.5s:0.5s)		2×10^5 Cycles			
Electrical Life		See graph			
Current-carrying capacity curve		See graph			
Insulation resistance		Initial：100MΩ 1000Vdc			
		After test：50MΩ 1000Vdc			
Impulse withstand voltage (initial)	Main contact 1mA/1min.(sea level)	AC 3500Vrms			
	Main contact & coil 1mA/1min.(sea level)	AC 2500Vrms		AC 3500Vrms	
Mechanical performance	Shock	20G peak,11ms 1/2 Sine wave (coil energized)			
	Vibration	20G peak,80-2000Hz,Sine wave (coil energized)			
	Strength	50G acceleration,half sine wave impulse 6ms, 50 times per axis.			
Operating & Storage Condition	Ambient Temperature	-40～+85°C			
	Humidity	5～95% RH.			
Altitude		≤4000m			
Weight		approx. 990g			
Certification		UL、CE、CCC			

COIL DATA

Coil Type	Nominal voltage (at 20°C)	Pick-up voltage (at 20°C)	Drop-out voltage (at 20°C)	Start-up current	Holding power (at 20°C)	Coil polarity
PWM	12-36Vdc	≤9Vdc	≥6Vdc	3.2A MAX	approx. 3.0W	non-polarized

Professional Renewable Energy Industry Solution Service Provider
东科 DONGKE

EVD800

DC HIGH VOLTAGE EV RELAY

EVD800

PART CODE

EVD	800	G	1	DA	5
Series	Rate current: “800” =800A	Contact form: “G”=normally open,non-polarity,aux.contact “E”=normally open,non-polarity	Coil volatge：“1”=9-36V dc	Rated voltage: 12V dc-1000V dc	600 outer Casing

DIMENSIONS

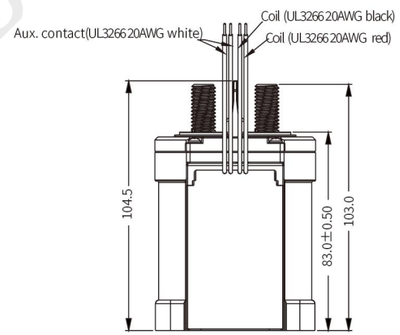

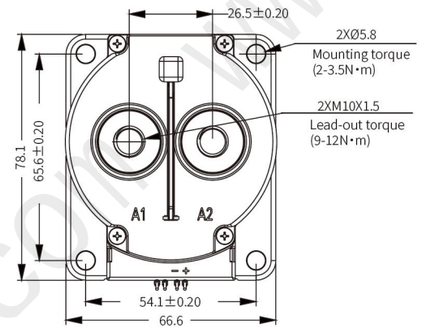

Note: 1.fastener:2xM10x8mm; 2.Mounting hardware M 5, torque 2-3.5N·m;
3.Main contact hardware M 10, torque 9-12N·m; 4.Main contact to copper area≥400mm²;

GRAPHS

■ Make & Break Power Switching Ratings

Make & Break switch (load resistance L/R≤1ms)

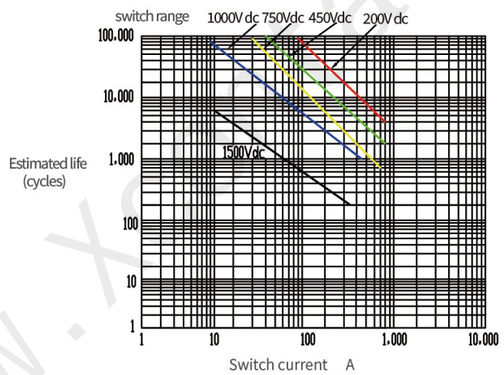

■ Current-carrying capacity curve

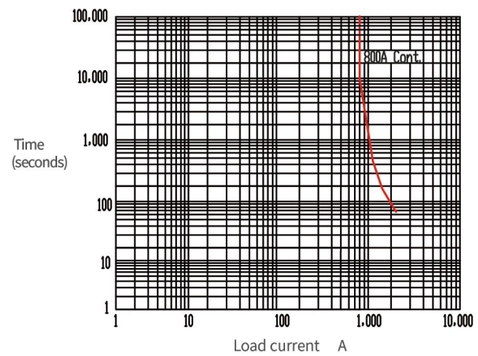

DC HIGH VOLTAGE EV RELAY

EVD1000

EVD1000

PERFORMANCE

ITEM		PARAMETER			
Contact Arrangement		SPST-NO			
Auxiliary Contact		SPST-NO(Optional)			
		MIN Load：8Vdc 100mA；Contact Resistance：≤100mΩ			
Voltage Rating		12-200Vdc	12-750Vdc	12-1000Vdc	12-1500Vdc
Current Rating		1-1000A			
Current Endurance		1000A Cont.；1100A 10min.；1200A 120sec.；1400A 30sec.			
Break Current, Max (only 1 time)		2500A 320Vdc			
Contact Resistance (Initial)		≤1mΩ (at 1000A)			
Operate Time (at 20°C)		40ms Max.			
Bounce Time (at 20°C)		5ms Max.			
Release Time (at 20°C)		20ms Max.			
Mechanical Life (0.5s:0.5s)		2×10^5 Cycles			
Electrical Life		See graph			
Current-carrying capacity curve		See graph			
Insulation resistance		Initial：100MΩ 1000Vdc			
		After test：50MΩ 1000Vdc			
Impulse withstand voltage (initial)	Main contact 1mA/1min.(sea level)	AC 3500Vrms			
	Main contact & coil 1mA/1min.(sea level)	AC 2500Vrms		AC 3500Vrms	
Mechanical performance	Shock	20G peak,11ms 1/2 Sine wave (coil energized)			
	Vibration	20G peak,80-2000Hz,Sine wave (coil energized)			
	Strength	50G acceleration,half sine wave impulse 6ms, 50 times per axis.			
Operating & Storage Condition	Ambient Temperature	-40～+85°C			
	Humidity	5～95% RH.			
Altitude		≤4000m			
Weight		approx. 990g			
Certification		UL、CE、CCC			

COIL DATA

Coil Type	Nominal voltage (at 20°C)	Pick-up voltage (at 20°C)	Drop-out voltage (at 20°C)	Start-up current	Holding power (at 20°C)	Coil polarity
PWM	12-36Vdc	≤9Vdc	≥6Vdc	3.2A MAX	approx. 3.0W	non-polarized

EVD1000

DC HIGH VOLTAGE EV RELAY

EVD1000

PART CODE

EVD	1000	G	1	DA	5
Series	Rate current: "1000"=1000A	Contact form: "G"=normally open,non-polarity,aux.contact "E"=normally open,non-polarity	Coil volatge: "1"=9-36V dc	Rated voltage: 12V dc-1000V dc	600 outer Casing

DIMENSIONS

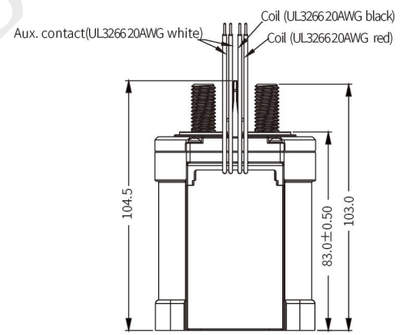

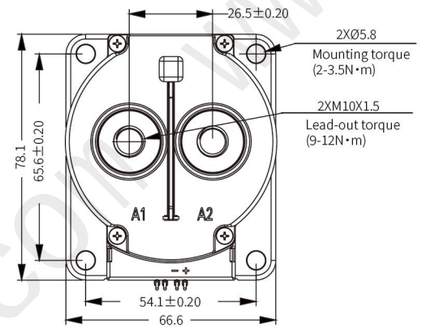

Note: 1.fastener:2xM10x8mm; 2.Mounting hardware M 5, torque 2-3.5N·m;
3.Main contact hardware M 10, torque 9-12N·m; 4.Main contact to copper area≥500mm²;

GRAPHS

■ Make & Break Power Switching Ratings

Make & Break switch (load resistance L/R≤1ms)

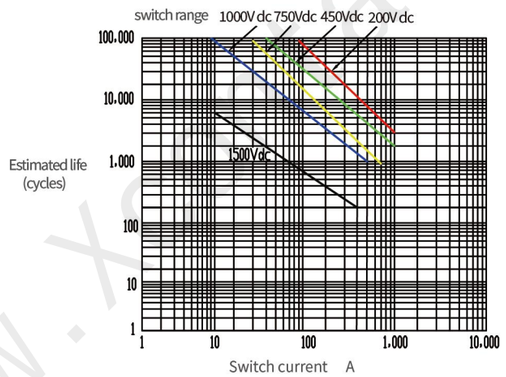

■ Current-carrying capacity curve