LED Gas Station Light

BRIGHTEN YOUR LIFE

NEW LED TECHNOLOGY THAT ALLOWS THE COEXISTENCE OF ENVIRONMENTAL PROTECTION AND ENERGY SAVING

Benefits

1.Replace conventional Gas Station Lights
2.Precision Die Cast Aluminum Housing
3.Fade Resistant Powder Coat Finish
4. Easy Installation
5. CE ROHS UL listed

BB-CSD-XXX-G

Features

1. Aluminum die-casting heat sinks is good for heat dissipation.
2. It's major to replace the conventional gas station light.
3. Green, energy saving, long and reliable life of 50,000 hours.
4. No RF interference, No IR/UV radiation ,no mercury pollution.
5. Wide colour availability in degrees Kelvin(K),2700-6700K.
6. Streamline exterior design, beautiful appearance.
7. Environment friendly ,energy saving (70~80%).
8. Special circuit design, each LED work separately, avoiding the single broken LED influence problem.

SMD LED

Aluminum die-casting housing

External UL listed Power Supply

Application

1. Gas station lighting.
2. Petroleum canopies lighting.
3. CNG fueling stations lighting.
4. Low-medium bay general lighting.
5. Soffits lighting.

SPECIFICATIONS

Power	160W	200W
Model	BB-CSD-160W-G	BB-CSD-200W-G
Luminous Flux	17300lm	23815lm
Replacement	MH 500W	MH 700W
Light Source	SMD LED	
Luminous Efficacy	110lm/w	
Operation Temp.	-40 to +45℃	
CCT	2700K SW / 3000K WW / 4100K NW / 5000K DW / 5700K CW	
CRI	80	
Life Span	50,000 hours at 25℃	
Voltage	100-277VAC/50-60HZ 200-480VAC/50-60HZ Available	
Driver	UL listed power supply	
Dimming	Available	
Beam Angle	120℃	
PF	>0.95	
Warranty	3Years	

DIMENSIONAL DRAWING

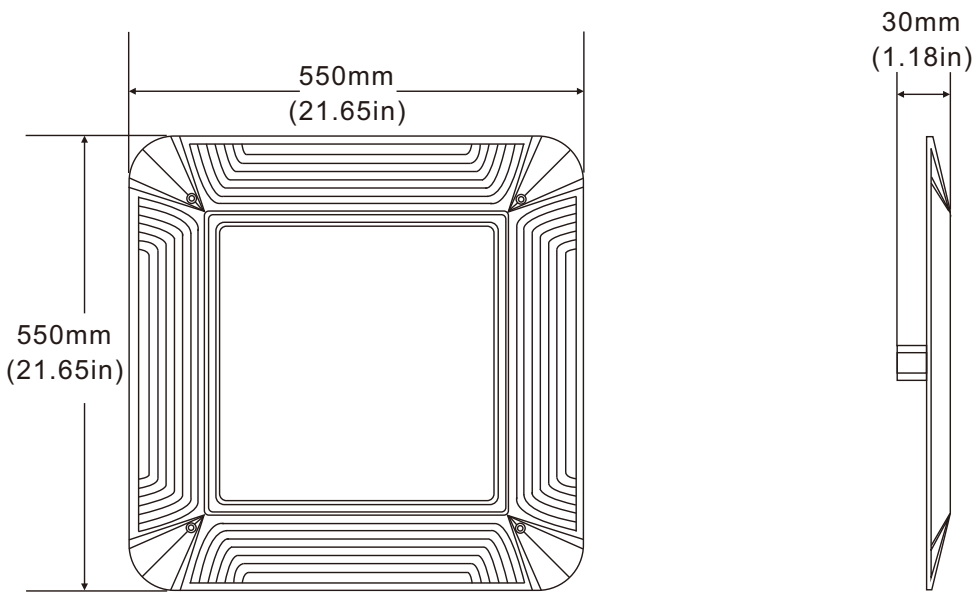

PROJECTS

By using our 160W Gas Station Light to replace 500W Metal Halide bulb for traditional petrol station lighting in world filling station ,the customer is now able to save a lot per month from his electric bill.

Replace

160W LED = 500W MH

Note:

- Don't take the LED lamp apart.
- The LED lamp must work under the right voltage according to the specification.

PACKING INFO

Packaging	Dimensions (L*W*H)	N.W	G.W	Volume weight
1pc/Box	680*620*100mm	7.5kg	9.5kg	10.0kg